2012 RDX
Owner's Manual
(Unlinked)

This document does not contain hyperlinks and may be formatted for printing instead of web use. This is due to changes in content and specifications of the vehicle that happen throughout the model year. This manual will be replaced with a hyperlinked version at the end of the model year.

© 2011 American Honda Motor Co., Inc. - All Rights Reserved

P/N 00X31-STK-6500

Owner's Identification

OWNER _____

_____

ADDRESS _____

STREET

_____ _____ _____

CITY STATE/PROVINCE/TERRITORY ZIP CODE/ POSTAL CODE

V. I. N. _____

DELIVERY DATE _____

(Date sold to original retail purchaser)

DEALER NAME _____ DEALER NO. _____

ADDRESS _____

STREET

_____ _____ _____

CITY STATE/PROVINCE/TERRITORY ZIP CODE/ POSTAL CODE

OWNER'S SIGNATURE _____

DEALER'S SIGNATURE _____

This owner's manual should be considered a permanent part of the vehicle and should remain with the vehicle when it is sold.

This owner's manual covers all models of the Acura RDX. You may find descriptions of equipment and features that are not on your particular vehicle.

Images throughout this owner's manual (including the front cover) represent features and equipment that are available on some, but not all, models. Your particular model may not have some of these features.

The information and specifications included in this publication were in effect at the time of approval for printing. Honda Motor Co., Ltd. reserves the right, however, to discontinue or change specifications or design at any time without notice and without incurring any obligation whatsoever.

POUR CLIENTS CANADIEN
AVIS IMPORTANT: Si vous avez besoin d'un Manuel du Conducteur en français, veuillez demander à votre concessionnaire de commander le numéro de pièce 33STKC50

Congratulations! Your selection of a 2012 Acura RDX was a wise investment. It will give you years of driving pleasure.

One of the best ways to enhance the enjoyment of your new vehicle is to read this manual. In it, you will learn how to operate its driving controls and convenience items. Afterwards, keep this owner's manual in your vehicle so you can refer to it at any time.

Several warranties protect your new vehicle. Read the warranty booklet thoroughly so you understand the coverages and are aware of your rights and responsibilities.

Maintaining your vehicle according to the Maintenance Minder™ shown in the instrument panel helps to keep your driving trouble-free while it preserves your investment. When your vehicle needs maintenance, keep in mind that your dealer's staff is specially trained in servicing the many systems unique to your vehicle. Your dealer is dedicated to your satisfaction and will be pleased to answer any questions and concerns.

As you read this manual, you will find information that is preceded by a NOTICE symbol. This information is intended to help you avoid damage to your vehicle, other property, or the environment.

California Proposition 65 Warning

WARNING: This product contains or emits chemicals known to the State of California to cause cancer and birth defects or other reproductive harm.

Event Data Recorders

This vehicle is equipped with one or more devices commonly referred to as event data recorders. These devices record front seat belt use, front passenger seat occupancy, airbag deployment data, and the failure of any airbag system component. This data belongs to the vehicle owner and may not be accessed by anyone else except as legally required or with the permission of the vehicle owner.

Service Diagnostic Recorders

This vehicle is equipped with service-related devices that record information about powertrain performance. The data can be used to verify emissions law requirements and/or help technicians diagnose and solve service problems. It may also be combined with data from other sources for research purposes, but it remains confidential.

California Perchlorate Contamination Prevention Act

The airbags, seat belt tensioners, and CR type batteries in this vehicle may contain perchlorate materials - special handling may apply. See www.dtsc.ca.gov/hazardouswaste/perchlorate/

Your safety, and the safety of others, is very important. And operating this vehicle safely is an important responsibility.

To help you make informed decisions about safety, we have provided operating procedures and other information on labels and in this manual. This information alerts you to potential hazards that could hurt you or others.

Of course, it is not practical or possible to warn you about all the hazards associated with operating or maintaining your vehicle. You must use your own good judgement.

You will find this important safety information in a variety of forms, including:

- **Safety Labels** – on the vehicle.
- **Safety Messages** – preceded by a safety alert symbol ⚠ and one of three signal words: **DANGER**, **WARNING**, or **CAUTION**.

  These signal words mean:

⚠ DANGER	You WILL be KILLED or SERIOUSLY HURT if you don't follow instructions.
⚠ WARNING	You CAN be KILLED or SERIOUSLY HURT if you don't follow instructions.
⚠ CAUTION	You CAN be HURT if you don't follow instructions.

- **Safety Headings** – such as Important Safety Reminders or Important Safety Precautions.
- **Safety Section** – such as Driver and Passenger Safety.
- **Instructions** – how to use this vehicle correctly and safely.

This entire book is filled with important safety information – please read it carefully.

Important Handling Information

Your RDX has higher ground clearance than a passenger vehicle designed for use only on pavement. Higher ground clearance has many advantages for off-highway driving. It allows you to travel over bumps, obstacles, and rough terrain. It also provides good visibility so you can anticipate problems earlier.

These advantages come at some cost. Because your vehicle is taller and rides higher off the ground, it has a high center of gravity. This means your vehicle can tip or roll over if you make abrupt turns. Utility vehicles have a significantly higher rollover rate than other types of vehicles. In a rollover crash, an unbelted person is significantly more likely to die than a person wearing a seat belt. As a reminder, make sure you and your passengers always wear seat belts.

For information on how to reduce the risk of rollover, read “Driving Guidelines” on page 372 of this manual and the *Off-Highway Driving Guidelines* section on page 405. Failure to operate your vehicle correctly might result in loss of control or an accident.

Contents

Your Vehicle at a Glance (main controls) **3**

Driver and Passenger Safety (seat belts, SRS, and child protection) **5**

Instruments and Controls (indicators, gauges, multi-information display, dashboard, and steering column) **61**

Features (climate control, audio, steering wheel, security, cruise control, HomeLink®, and other convenience items) ... **163**

Before Driving (fuel, vehicle break-in, and cargo loading) **351**

Driving (engine and transmission operation) **371**

Maintenance (minders, fluid checking, minor services, and vehicle storage) **409**

Taking Care of the Unexpected (flat tire, jump starting, overheating, and fuses) **453**

Technical Information (vehicle specifications, tires, and emissions controls) **477**

Warranty and Client Relations (U.S. and Canada only) (warranty and contact information) **493**

Index ..... **I**

Service Information Summary (fluid capacities and tire pressures) ..... **last page**

Overview of Contents

Contents
A convenient reference to the sections in this manual.

Your Vehicle at a Glance
A quick reference to the main controls in your vehicle.

Driver and Passenger Safety
Important information about the proper use and care of your vehicle's seat belts, an overview of the supplemental restraint system, and valuable information on how to protect children with child restraints.

Instruments and Controls
Explains the purpose of each instrument panel indicator and gauge, and how to use the controls on the dashboard and steering column.

Features
How to operate the climate control system, the audio system, and other convenience features.

Before Driving
What gasoline to use, how to break-in your new vehicle, and how to load luggage and other cargo.

Driving
The proper way to start the engine, shift the transmission, and park; plus what you need to know if you're planning to tow a trailer.

Maintenance
The Maintenance Minder™ shows you when you need to take your vehicle to the dealer for maintenance service. There is also a list of things to check and instructions on how to check them.

Taking Care of the Unexpected
This section covers several problems motorists sometimes experience, and details how to handle them.

Technical Information
ID numbers, dimensions, capacities, and technical information.

Warranty and Client Relations (U.S. and Canada only)
A summary of the warranties covering your new vehicle, and how to contact us for any reason. Refer to your warranty manual for detailed information.

Index

Service Information Summary
A summary of the information you need when you pull up to the fuel pump.

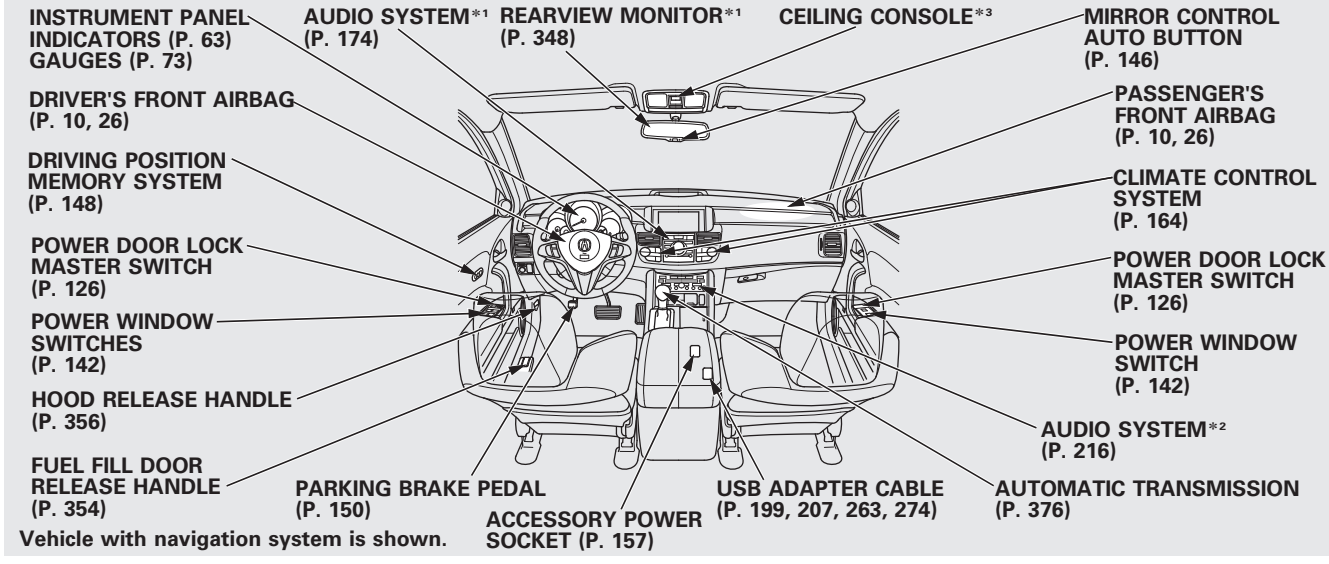

Vehicle with navigation system is shown.

*1: On models without navigation system.
*2: On models with navigation system.
*3: HomeLink® buttons (P. 303)
Moonroof Switch (P. 144)
Front Ceiling Light Switch (P. 151)

CONTINUED

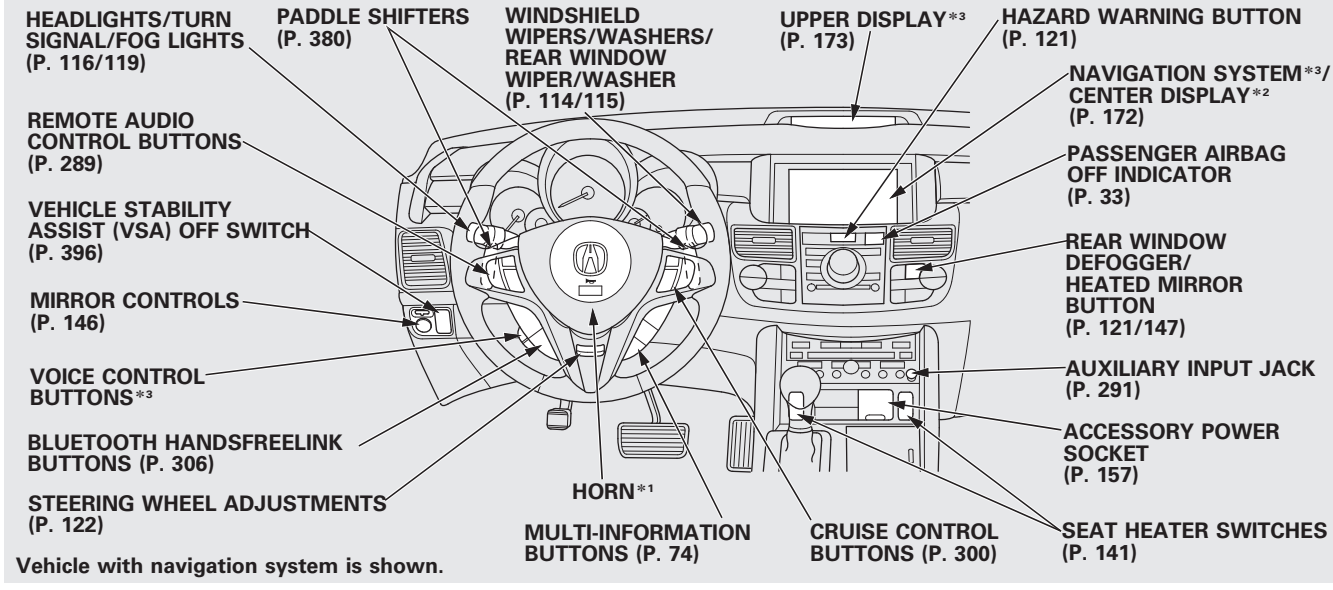

Vehicle with navigation system is shown.

*1: To use the horn, press the center pad of the steering wheel.
*2: On models without navigation system.
*3: Only on vehicles equipped with navigation system. Refer to the navigation system manual.

This section gives you important information about how to protect yourself and your passengers. It shows you how to use seat belts properly. It explains how your airbags work, and it tells you how to properly restrain infants and children in your vehicle.

Important Safety Precautions 6
Your Vehicle's Safety Features..... 8
  Seat Belts 9
  Airbags 10
Protecting Adults and Teens..... 12
  1. Close and Lock the Doors..... 12
  2. Adjust the Front Seats 13
  3. Adjust the Seat-Backs 14
  4. Adjust the Head Restraints..... 15
  5. Fasten and Position the Seat Belts 15
  6. Maintain a Proper Sitting Position 17
  Advice for Pregnant Women..... 18
  Additional Safety Precautions 19
Additional Information About Your Seat Belts 20
  Seat Belt System Components 20
  Lap/Shoulder Belt..... 21
  Automatic Seat Belt Tensioners 22
  Seat Belt Maintenance 23
Additional Information About Your Airbags..... 24
  Airbag System Components 24
  How Your Front Airbags Work 26
  How Your Side Airbags Work..... 30
  How Your Side Curtain Airbags Work 31
  How the SRS Indicator Works 32
  How the Side Airbag Off Indicator Works..... 32
  How the Passenger Airbag Off Indicator Works 33
  Airbag Service 34
  Additional Safety Precautions 35
Protecting Children – General Guidelines 36
  All Children Must Be Restrained..... 36
  All Children Should Sit in a Back Seat 37
  The Passenger's Front Airbag Can Pose Serious Risks 37
  If You Must Drive with Several Children..... 39
  If a Child Requires Close Attention 39
  Additional Safety Precautions 40
Protecting Infants and Small Children 41
  Protecting Infants..... 41
  Protecting Small Children 42
Selecting a Child Seat 44
  Important considerations when selecting a child seat..... 44
Installing a Child Seat 45
  Installing a Child Seat with LATCH 46
  Installing a Child Seat with a Lap/Shoulder Belt..... 50
  Installing a Child Seat with a Tether..... 51
Protecting Larger Children..... 53
  Checking Seat Belt Fit 53
  Using a Booster Seat 54
  When Can a Larger Child Sit in Front..... 55
  Additional Safety Precautions 56
Carbon Monoxide Hazard 57
Safety Labels 58

You'll find many safety recommendations throughout this section, and throughout this manual. The recommendations on this page are the ones we consider to be the most important.

Always Wear Your Seat Belt
A seat belt is your best protection in all types of collisions. Airbags are designed to supplement seat belts, not replace them. So even though your vehicle is equipped with airbags, make sure you and your passengers always wear your seat belts, and wear them properly (see page 15).

Restrain All Children
Children age 12 and under should ride properly restrained in a back seat, not the front seat. Infants and small children should be restrained in a child seat. Larger children should use a booster seat and a lap/shoulder belt until they can use the belt properly without a booster seat (see pages 36 – 56).

Be Aware of Airbag Hazards
While airbags can save lives, they can cause serious or fatal injuries to occupants who sit too close to them, or are not properly restrained. Infants, young children, and short adults are at the greatest risk. Be sure to follow all instructions and warnings in this manual.

Don't Drink and Drive
Alcohol and driving don't mix. Even one drink can reduce your ability to respond to changing conditions, and your reaction time gets worse with every additional drink. So don't drink and drive, and don't let your friends drink and drive, either.

Pay Appropriate Attention to the Task of Driving Safely
Engaging in mobile phone conversation or other activities that keep you from paying close attention to the road, other vehicles and pedestrians could lead to a crash. Remember, situations can change quickly, and only you can decide when it is safe to divert attention away from driving.

Control Your Speed
Excessive speed is a major factor in crash injuries and deaths. Generally, the higher the speed, the greater the risk, but serious injuries can also occur at lower speeds. Never drive faster than is safe for current conditions, regardless of the maximum speed posted.

Keep Your Vehicle in Safe Condition
Having a tire blowout or a mechanical failure can be extremely hazardous. To reduce the possibility of such problems, check your tire pressures and condition frequently, and perform all regularly scheduled maintenance (see page 444).

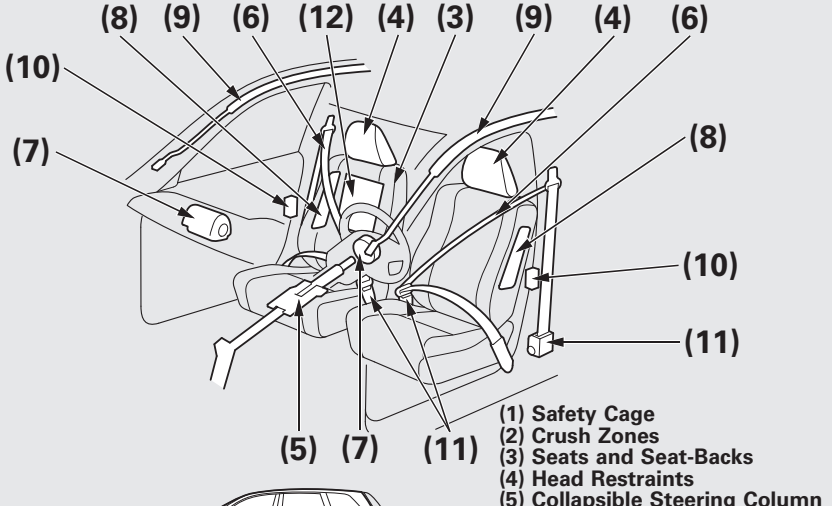

(1) Safety Cage
(2) Crush Zones
(3) Seats and Seat-Backs
(4) Head Restraints
(5) Collapsible Steering Column
(6) Seat Belts
(7) Front Airbags
(8) Side Airbags
(9) Side Curtain Airbags
(10) Door Locks
(11) Front Seat Belt Tensioners
(12) Occupant Position Detection System (OPDS) Sensor

Your vehicle is equipped with many features that work together to protect you and your passengers during a crash.

Some features do not require any action on your part. These include a strong steel framework that forms a safety cage around the passenger compartment, front and rear crush zones, a collapsible steering column, and tensioners that tighten the front seat belts in a crash.

However, you and your passengers can't take full advantage of these features unless you remain sitting in the correct position and ***always wear your seat belts.*** In fact, some safety features can contribute to injuries if they are not used properly.

The following pages explain how you can take an active role in protecting yourself and your passengers.

Seat Belts
Your vehicle is equipped with seat belts in all seating positions.

Your seat belt system also includes an indicator on the instrument panel and a beeper to remind you and your passengers to fasten your seat belts.

Why Wear Seat Belts
Seat belts are the single most effective safety device for adults and larger children. (Infants and smaller children must be properly restrained in child seats.)

Not wearing a seat belt properly increases the chance of serious injury or death in a crash, even though your vehicle has airbags.

In addition, most states and all Canadian provinces require you to wear seat belts.

⚠WARNING

Not wearing a seat belt properly increases the chance of serious injury or death in a crash, even though your vehicle has airbags.

Be sure you and your passengers always wear seat belts and wear them properly.

When properly worn, seat belts:

- Keep you connected to the vehicle so you can take advantage of the vehicle's built-in safety features.
- Help protect you in almost every type of crash, including:
  - frontal impacts
  - side impacts
  - rear impacts
  - rollovers
- Help keep you from being thrown against the inside of the vehicle and against other occupants.
- Keep you from being thrown out of the vehicle.
- Help keep you in a good position should the airbags ever deploy. A good position reduces the risk of injury from an inflating airbag and allows you to get the best advantage from the airbag.

Of course, seat belts cannot completely protect you in every crash. But in most cases, seat belts can reduce your risk of serious injury.

What You Should Do:
Always wear your seat belt, and make sure you wear it properly.

Airbags

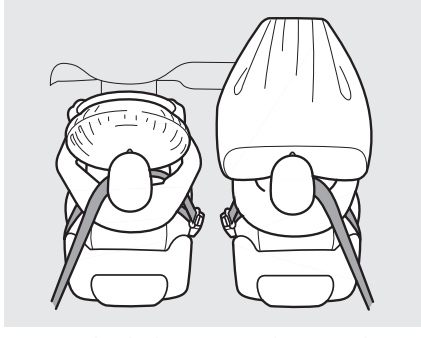

Your vehicle has a supplemental restraint system (SRS) with front airbags to help protect the heads and chests of the driver and a front seat passenger during a moderate to severe frontal collision (see page 26 for more information on how your front airbags work).

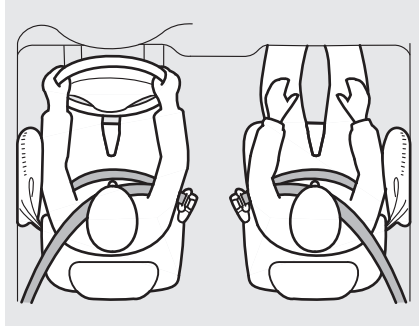

Your vehicle also has side airbags to help protect the upper torso of the driver or a front seat passenger during a moderate to severe side impact (see page 30 for more information on how your side airbags work).



In addition, your vehicle has side curtain airbags to help protect the heads of the driver and passengers in outboard seating positions during a moderate-to-severe side impact.

The side curtain airbags equipped in this vehicle are also designed to help reduce the likelihood of partial and complete ejection of vehicle occupants through side windows in crashes, particularly rollover crashes (see page 31 for additional information on how your side curtain airbags work).

The most important things you need to know about your airbags are:

- ***Airbags do not replace seat belts.*** They are designed to supplement the seat belts.
- ***Airbags offer no protection in rear impacts, or minor frontal or side collisions.***
- ***Airbags can pose serious hazards.*** To do their job, airbags must inflate with tremendous force. So while airbags help save lives, they can cause minor injuries or more serious or even fatal injuries if occupants are not properly restrained or sitting properly.

What you should do: Always wear your seat belt properly, and sit upright and as far back from the steering wheel as possible while allowing full control of the vehicle. A front passenger should move their seat as far back from the dashboard as possible.

The rest of this section gives more detailed information about how you can maximize your safety.

Remember, however, that no safety system can prevent all injuries or deaths that can occur in a severe crash, even when seat belts are properly worn and the airbags deploy.

Introduction
The following pages provide instructions on how to properly protect the driver, adult passengers, and teenage children who are large enough and mature enough to drive or ride in the front.

See pages 36 – 56 for important guidelines on how to properly protect infants, small children, and larger children who ride in your vehicle.

1. Close and Lock the Doors
After everyone has entered the vehicle, be sure the doors and the tailgate are closed and locked.

Your vehicle has a door and tailgate open indicator on the multi-information display to indicate when a specific door or the tailgate is not tightly closed. You will see the appropriate indicator and the message for each condition.





When one or more doors are not tightly closed, the “DOOR OPEN” message will come on.
When the tailgate is not tightly closed, the “TAILGATE OPEN” message will come on.



When both tailgate and one or more doors are not tightly closed, the “DOOR & TAILGATE OPEN” message will come on.

You will also hear a beep when you turn the ignition switch to the ON (II) position, and each time you open any door or the tailgate with the key in the ON (II) position.

Locking the doors and the tailgate reduces the chance of someone being thrown out of the vehicle during a crash, and it helps prevent passengers from accidentally opening a door or the tailgate and falling out.

Locking the doors and the tailgate also helps prevent an outsider from unexpectedly opening a door or the tailgate when you come to a stop.

See page 126 for how to lock the doors and the tailgate.

This vehicle has auto door locking/unlocking features. See pages 103 and 111 for how to set them.

2. Adjust the Front Seats

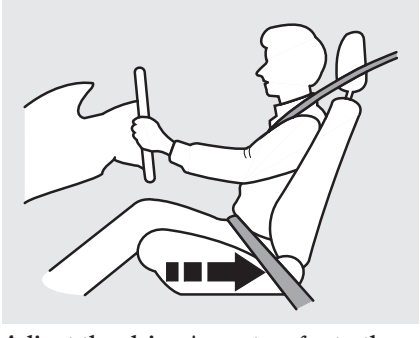

Adjust the driver's seat as far to the rear as possible while allowing you to maintain full control of the vehicle. Have a front passenger adjust their seat as far to the rear as possible.

If you sit too close to the steering wheel or dashboard, you can be seriously injured by an inflating front airbag, or by striking the steering wheel or dashboard.

The National Highway Traffic Safety Administration and Transport Canada recommend that drivers allow at least 10 inches (25 cm) between the center of the steering wheel and the chest. In addition to adjusting the seat, you can adjust the steering wheel up and down, and in and out (see page 122).

If you cannot get far enough away from the steering wheel and still reach the controls, we recommend that you investigate whether some type of adaptive equipment may help.

CONTINUED

⚠WARNING

Sitting too close to a front airbag can result in serious injury or death if the front airbags inflate.

Always sit as far back from the front airbags as possible.

See page 134 for how to adjust the front seats.

3. Adjust the Seat-Backs

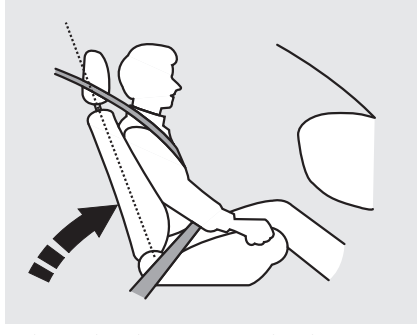

Adjust the driver's seat-back to a comfortable, upright position, leaving ample space between your chest and the airbag cover in the center of the steering wheel.

Passengers with adjustable seat-backs should also adjust their seat-back to a comfortable, upright position.

⚠WARNING

Reclining the seat-back too far can result in serious injury or death in a crash.

Adjust the seat-back to an upright position, and sit well back in the seat.

Reclining a seat-back so that the shoulder part of the belt no longer rests against the occupant's chest reduces the protective capability of the belt. It also increases the chance of sliding under the belt in a crash and being seriously injured. The farther a seat-back is reclined, the greater the risk of injury.

See page 134 for how to adjust the seat-backs.

4. Adjust the Head Restraints

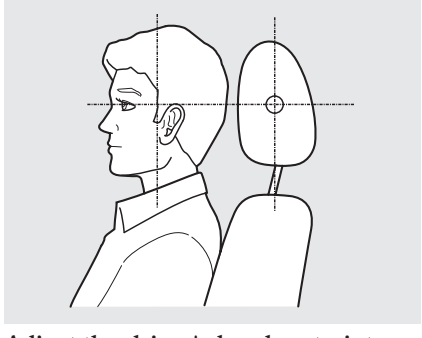

Adjust the driver's head restraint so the center of the back of your head rests against the center of the restraint.

Have passengers adjust their head restraints properly as well. Taller persons should adjust their restraint as high as possible.

⚠WARNING

Improperly positioning head restraints reduces their effectiveness and you can be seriously injured in a crash.

Make sure head restraints are in place and positioned properly before driving.

Properly adjusted head restraints will help protect occupants from whiplash and other crash injuries.

See page 135 for how to adjust the head restraints and how the driver's and front passenger's active head restraints work.

5. Fasten and Position the Seat Belts

Insert the latch plate into the buckle, then tug on the belt to make sure the belt is securely latched. Check that the belt is not twisted, because a twisted belt can cause serious injuries in a crash.

CONTINUED



Position the lap part of the belt as low as possible across your hips, then pull up on the shoulder part of the belt so the lap part fits snugly. This lets your strong pelvic bones take the force of a crash and reduces the chance of internal injuries.

If necessary, pull up on the belt again to remove any slack, then check that the belt rests across the center of your chest and over your shoulder.

This spreads the forces of a crash over the strongest bones in your upper body.

⚠WARNING

Improperly positioning the seat belts can cause serious injury or death in a crash.

Make sure all seat belts are properly positioned before driving.

If the seat belt touches or crosses your neck, or if it crosses your arm instead of your shoulder, you need to adjust the seat belt anchor height.

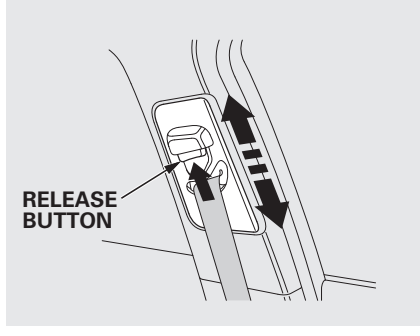

The front seats have adjustable seat belt anchors. To adjust the height of an anchor, press and hold the release button and slide the anchor up or down as needed (it has four positions).

Never place the shoulder portion of a lap/shoulder belt under your arm or behind your back. This could cause very serious injuries in a crash.

If a seat belt does not seem to work properly, it may not protect the occupant in a crash.

No one should sit in a seat with an inoperative seat belt. Using a seat belt that is not working properly can result in serious injury or death. Have your dealer check the belt as soon as possible.

See page 20 for additional information about your seat belts and how to take care of them.

6. Maintain a Proper Sitting Position

After all occupants have adjusted their seats and head restraints, and put on their seat belts, it is very important that they continue to sit upright, well back in their seats, with their feet on the floor, until the vehicle is parked and the engine is off.

Sitting improperly can increase the chance of injury during a crash. For example, if an occupant slouches, lies down, turns sideways, sits forward, leans forward or sideways, or puts one or both feet up, the chance of injury during a crash is greatly increased.

In addition, an occupant who is out of position in the front seat can be seriously or fatally injured in a crash by striking interior parts of the vehicle or being struck by an inflating front airbag.

⚠WARNING

Sitting improperly or out of position can result in serious injury or death in a crash.

Always sit upright, well back in the seat, with your feet on the floor.

Advice for Pregnant Women



If you are pregnant, the best way to protect yourself and your unborn child when driving or riding in a vehicle is to always wear a seat belt, and keep the lap part of the belt as low as possible across the hips.

When driving, remember to sit upright and adjust the seat as far back as possible while allowing full control of the vehicle. When riding as a front passenger, adjust the seat as far back as possible.

This will reduce the risk of injuries to both you and your unborn child that can be caused by a crash or an inflating front airbag.

Each time you have a checkup, ask your doctor if it's okay for you to drive.

Additional Safety Precautions

- ***Never let passengers ride in the cargo area or on top of a folded-down back seat.*** If they do, they could be very seriously injured in a crash.
- ***Passengers should not stand up or change seats while the vehicle is moving.*** A passenger who is not wearing a seat belt during a crash or emergency stop can be thrown against the inside of the vehicle, against other occupants, or out of the vehicle.
- ***Two people should never use the same seat belt.*** If they do, they could be very seriously injured in a crash.
- ***Do not put any accessories on seat belts.*** Devices intended to improve occupant comfort or reposition the shoulder part of a seat belt can reduce the protective capability of the belt and increase the chance of serious injury in a crash.
- ***Do not place hard or sharp objects between yourself and a front airbag.*** Carrying hard or sharp objects on your lap, or driving with a pipe or other sharp object in your mouth, can result in injuries if your front airbag inflates.
- ***Keep your hands and arms away from the airbag covers.*** If your hands or arms are close to an airbag cover, they could be injured if the airbag inflates.
- ***Do not attach or place objects on the front airbag covers.*** Objects on the covers marked “SRS AIRBAG” could interfere with the proper operation of the airbags or be propelled inside the vehicle and hurt someone if the airbags inflate.
- ***Do not attach hard objects on or near a door.*** If a side airbag or a side curtain airbag inflates, a cup holder or other hard object attached on or near the door could be propelled inside the vehicle and hurt someone.
- ***Do not cover or replace front seat-back covers without consulting your dealer.*** Improperly replacing or covering front seat-back covers can prevent your side airbags from inflating during a side impact.

Seat Belt System Components
Your seat belt system includes lap/shoulder belts in all seating positions. The front seat belts are also equipped with automatic seat belt tensioners.


The seat belt system includes an indicator on the instrument panel and a beeper to remind you and your passengers to fasten your seat belts.

This system monitors the front seat belts. If you turn the ignition switch to the ON (II) position before your seat belt is fastened, the beeper will sound and the indicator will flash. If your seat belt is not fastened before the beeper stops, the indicator will stop flashing but remain on.

If a front passenger does not fasten their seat belt, the indicator will come on about 6 seconds after the ignition switch is turned to the ON (II) position.

If either the driver or a front passenger does not fasten their seat belt while driving, the beeper will sound and the indicator will flash again at regular intervals.

In addition to the seat belt reminder indicator in the instrument panel, you will also see a “FASTEN SEAT BELT” or “FASTEN PASSENGER SEAT BELT” message. This remains displayed if you ignore it and do not fasten the seat belt while driving.

When no one is sitting in the front passenger's seat, or a child or small adult is riding there, the indicator should not come on and the beeper should not sound.

If the indicator comes on or the beeper sounds when the driver's seat belt is latched and there is no front seat passenger and no items on the front seat, something may be interfering with the monitoring system. Look for and remove:

- Any items under the front passenger's seat.
- Any object(s) hanging on the seat or in the seat-back pocket.
- Any object(s) touching the rear of the seat-back.

If no obstructions are found, have your vehicle checked by a dealer.

Lap/Shoulder Belt

The lap/shoulder belt goes over your shoulder, across your chest, and across your hips.

To fasten the belt, insert the latch plate into the buckle, then tug on the belt to make sure the buckle is latched (see page 15 for how to properly position the belt).

To unlock the belt, press the red PRESS button on the buckle. Guide the belt across your body so that it retracts completely. After exiting the vehicle, be sure the belt is out of the way and will not get closed in the door.

All seat belts have an emergency locking retractor. In normal driving, the retractor lets you move freely in your seat while it keeps some tension on the belt. During a collision or sudden stop, the retractor automatically locks the belt to help restrain your body.

The seat belts in all positions except the driver's have a lockable retractor that must be activated to secure a child seat (see page 50).

CONTINUED

If the shoulder part of the belt is pulled all the way out, the lockable retractor will activate. The belt will retract, but it will not allow the passenger to move freely.

To deactivate the lockable retractor, unlatch the buckle and let the seat belt fully retract. To refasten the seat belt, pull it out only as far as needed.

⚠WARNING

Allowing a child to play with a seat belt or wrap one around their neck can result in serious injury or death.

Instruct children not to play with any seat belt and make sure any unused seat belt a child can reach is buckled, fully retracted, and locked.

Automatic Seat Belt Tensioners

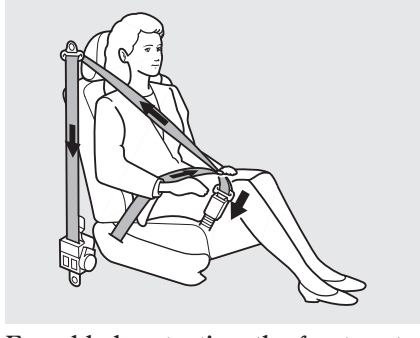

For added protection, the front seat belts are equipped with automatic seat belt tensioners. When activated, the tensioners immediately tighten the belts to help hold the driver and a front passenger in position.

The tensioners can be activated during a collision in which the front airbags *do not deploy.* In this case, the airbags would not be needed, but the additional restraint could be helpful.

If the tensioner is activated, the SRS indicator comes on and the tensioner must be replaced.

Seat Belt Maintenance
For safety, you should check the condition of your seat belts regularly.

Pull each belt out fully, and look for frays, cuts, burns, and wear. Check that the latches work smoothly and the belts retract easily. If a belt does not retract easily, cleaning the belt may correct the problem (see page 438). Any belt that is not in good condition or working properly will not provide good protection and should be replaced as soon as possible.

Acura provides a limited warranty on seat belts. See your *Acura Warranty Information* booklet for details.

If a seat belt is worn during a crash, you should have your dealer inspect the belt, and replace it if necessary. A belt that has been worn during a crash may not provide the same level of protection in a subsequent crash.

The dealer should also inspect the anchors for damage and replace them if needed. If the automatic seat belt tensioners activate during a crash, they must be replaced.

⚠ WARNING

Not checking or maintaining seat belts can result in serious injury or death if the seat belts do not work properly when needed.

Check your seat belts regularly and have any problem corrected as soon as possible.

Airbag System Components

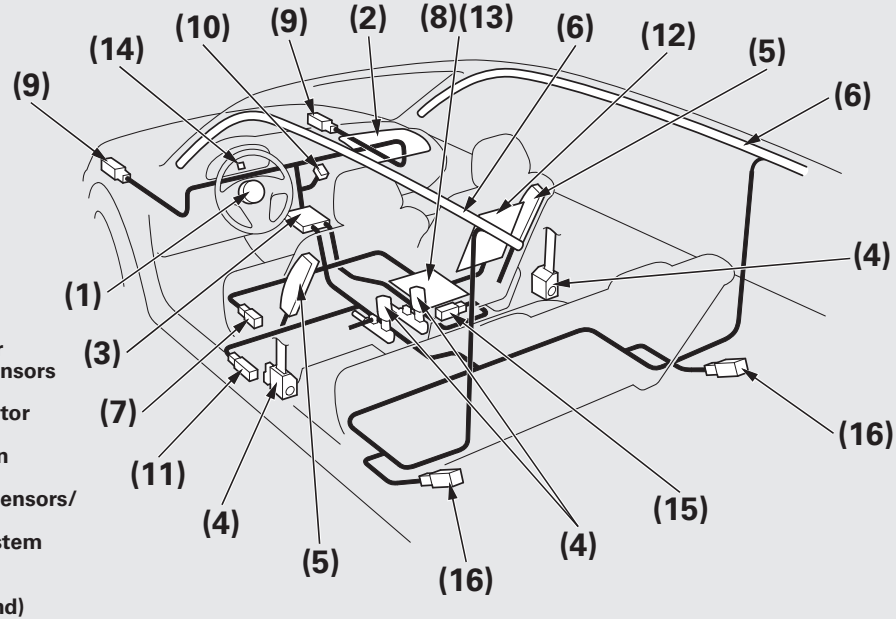

(1) Driver's Front Airbag
(2) Passenger's Front Airbag
(3) Control Unit
(4) Front Seat Belt Tensioners
(5) Side Airbags
(6) Side Curtain Airbags
(7) Driver's Seat Position Sensor
(8) Front Passenger's Weight Sensors
(9) Front Impact Sensors
(10) Passenger Airbag Off Indicator
(11) Side Impact Sensors (First)
(12) Occupant Position Detection System (OPDS) Sensors
(13) Front Passenger's Weight Sensors/ OPDS Sensors Control Unit
(14) Supplemental Restraint System (SRS) Indicator
(15) Rollover Sensor
(16) Side Impact Sensors (Second)

Your airbag system includes:

- Two SRS (supplemental restraint system) front airbags. The driver's airbag is stored in the center of the steering wheel; the front passenger's airbag is stored in the dashboard. Both are marked “SRS AIRBAG” (see page 26).
- Two side airbags, one for the driver and one for a front passenger. The airbags are stored in the outer edges of the seat-backs. Both are marked “SIDE AIRBAG” (see page 30).
- Two side curtain airbags, one for each side of the vehicle. The airbags are stored in the ceiling, above the side windows. The front and rear pillars are marked “SIDE CURTAIN AIRBAG” (see page 31).
- Automatic front seat belt tensioners (see page 22).
- Sensors that can detect a moderate to severe front impact, side impact, or rollover.
- Sensors that can detect whether a child is in the passenger's side airbag path and signal the control unit to turn the airbag off (see page 30).
- Sensors that can detect whether the driver's seat belt and the front passenger's seat belt are latched or unlatched (see page 20).
- A driver's seat position sensor that monitors the distance of the seat from the front airbag. If the seat is too far forward, the airbag will inflate with less force (see page 28).
- Weight sensors that monitor the weight on the front passenger's seat. If the weight is about 65 lbs (29 kg) or less (the weight of an infant or small child), the passenger's front airbag will be turned off (see page 28).
- A rollover sensor that can detect if your vehicle is about to roll over and signal the control unit to deploy both side curtain airbags (see page 31).
- A sophisticated electronic system that continually monitors and records information about the sensors, the control unit, the airbag activators, the seat belt tensioners, and driver and front passenger seat belt use when the ignition switch is in the ON (II) position.

CONTINUED

- An indicator on the instrument panel that alerts you to a possible problem with your airbag system components (see page 32 and 65).
- An indicator on the instrument panel that alerts you that the passenger's side airbag has been turned off (see page 32).
- An indicator on the dashboard that alerts you that the passenger's front airbag has been turned off (see page 33).
- Emergency backup power in case your vehicle's electrical system is disconnected in a crash.

How Your Front Airbags Work

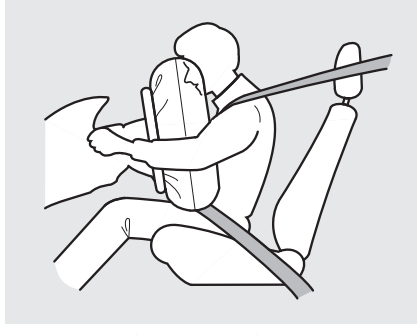

If you ever have a moderate to severe frontal collision, sensors will detect the vehicle's rapid deceleration.

If the rate of deceleration is high enough, the control unit will inflate the driver's and front passenger's airbags, at the time and with the force needed.

During a frontal crash, your seat belt restrains your lower body and torso, and the front airbag helps protect your head and chest.

Although both airbags normally inflate within a split second of each other, it is possible for only one airbag to deploy.

This can happen if the severity of a collision is at the margin, or threshold, that determines whether or not the airbags will deploy. In such cases, the seat belt will provide sufficient protection, and the supplemental protection offered by the airbag would be minimal.

Only the driver's airbag will deploy if there is no passenger in the front seat, or if the advanced airbag system has turned the passenger's airbag off (see page 33).

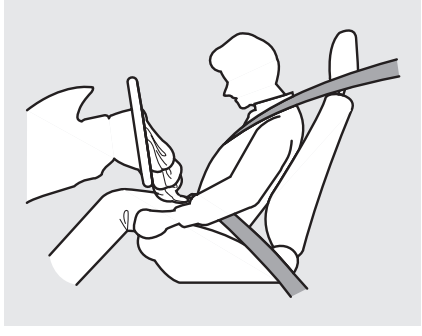

After inflating, the front airbags immediately deflate, so they won't interfere with the driver's visibility, or the ability to steer or operate other controls.

The total time for inflation and deflation is one-tenth of a second, so fast that most occupants are not aware that the airbags deployed until they see them lying in their laps.

After a crash, you may see what looks like smoke. This is actually powder from the airbag's surface. Although the powder is not harmful, people with respiratory problems may experience some temporary discomfort. If this occurs, get out of the vehicle as soon as it is safe to do so.

Dual-Stage, Multiple-Threshold Front Airbags (SRS)

Your vehicle is equipped with dual-stage, multiple-threshold front airbags (SRS). During a frontal crash severe enough to cause one or both front airbags to deploy, the airbags can inflate at different rates, depending on the severity of the crash, whether or not the seat belts are latched, and/or other factors. Front airbags are designed to supplement the seat belts to help reduce the likelihood of head and chest injuries in frontal crashes.

CONTINUED

Advanced Airbags
Your front airbags are also advanced airbags. The main purpose of this feature is to help prevent airbag-caused injuries to short drivers and children or small-statured adults who ride in front.

For both advanced airbags to work properly:

- Occupants must sit upright and wear their seat belts properly.
- Do not spill any liquids on or under the seats, cover the sensors, or put any objects or metal items under the front seats.
- Objects placed or pushed under the front passenger's seat may cause the sensor to malfunction, increasing the risk of injury in a crash.

Failure to follow these instructions could damage the sensors or prevent them from working properly.

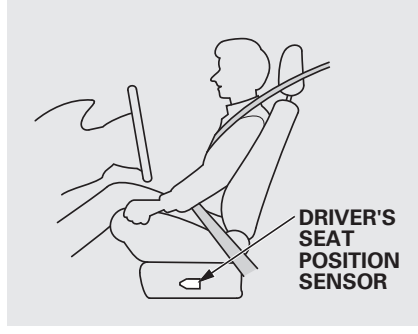

The driver's advanced front airbag system includes a seat position sensor under the seat. If the seat is too far forward, the airbag will inflate with less force, regardless of the severity of the impact.

If there is a problem with the sensor, the SRS indicator will come on, and the airbag will inflate in the normal manner regardless of the driver's seating position.

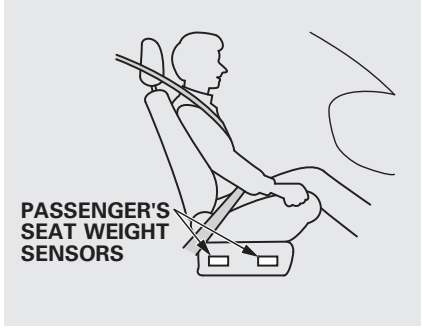

The passenger's advanced front airbag system has weight sensors under the seat. Although Acura does not encourage carrying an infant or small child in front, if the sensors detect the weight of an infant or small child (up to about 65 lbs or 29 kg), the system will automatically turn the passenger's front airbag off.

Be aware that objects placed on the passenger's seat can also cause the airbag to be turned off.

When the passenger airbag gets turned off by the weight sensors, a "passenger airbag off" indicator in the center of the dashboard comes on (see page 33).

If the weight sensors detect there is no passenger in the front seat, the airbag is automatically turned off. However, the passenger airbag off indicator in this situation will not come on.

To ensure that the passenger's advanced front airbag system will work properly, ***do not do anything that would increase or decrease the weight on the front passenger's seat.*** This includes:

- A rear passenger pushing or pulling on the back of the front passenger's seat.
- Moving the front seat forcibly back against cargo on the seat or floor behind it.
- Hanging heavy items on the front passenger seat, or placing heavy items in the seat-back pocket.
- Moving the front seat or seat-back forcibly back against the folded rear seat.
- Back seat passengers should not wedge objects or intentionally force their feet under the front passenger seat.

  Also, make sure the floor mat behind the front passenger's seat is properly positioned on the floor (see page 438). If it is not, the mat may interfere with the proper operation of the front passenger's seat and its sensors.

How Your Side Airbags Work

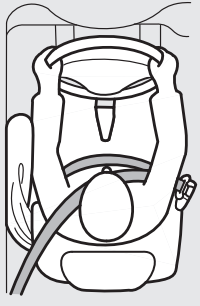

If you ever have a moderate to severe side impact, sensors will detect rapid acceleration and signal the control unit to instantly inflate either the driver's or the passenger's side airbag.

Only one airbag will deploy during a side impact. If the impact is on the passenger's side, the passenger's side airbag will deploy even if there is no passenger.

To get the best protection from the side airbags, front seat occupants should wear their seat belts and sit upright and well back in their seats.

Side Airbag Cutoff System

Your vehicle has a side airbag cutoff system designed primarily to protect a child riding in the front passenger's seat.

Although Acura does not encourage children to ride in front, if the position sensors detect a child has leaned into the side airbag's deployment path, the airbag will shut off.

The side airbag may also shut off if a short adult leans sideways, or a larger adult slouches and leans sideways into the airbag's deployment path.

Objects placed on the front passenger seat can also cause the side airbag to be shut off.

If the side airbag off indicator comes on (see page 32), have the passenger sit upright. Once the passenger is out of the airbag's deployment path, the system will turn the airbag back on, and the indicator will go out.

There will be some delay between the moment the passenger moves into or out of the airbag deployment path and when the indicator comes on or goes off.

A front seat passenger should not use a cushion or other object as a backrest. It may prevent the cutoff system from working properly.

How Your Side Curtain Airbags Work

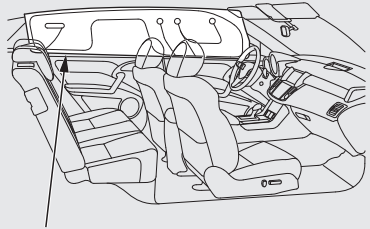

In a Side Impact
In a moderate to severe side impact, sensors will detect rapid acceleration and signal the control unit to instantly inflate the side curtain airbag.

If the impact is on the passenger's side, the passenger's side curtain airbag will inflate even if there are no occupants on that side of the vehicle.

In a Rollover
If the rollover sensor detects your vehicle is about to roll over, it signals the control unit, which immediately deploys both side curtain airbags and activates both front seat belt tensioners.

The airbag on the passenger's side will deploy, and the seat belt tensioner will activate, even if there are no passengers on that side of the vehicle.

To get the best protection from the side curtain airbags, occupants should wear their seat belts and sit upright and well back in their seats.

How the SRS Indicator Works



The SRS indicator alerts you to a potential problem with your airbag system components.

When you turn the ignition switch to the ON (II) position, this indicator comes on for several seconds then goes off. This tells you the system is working properly.

If the indicator comes on at any other time, or does not come on at all, you should have the system checked by your dealer. For example:

- If the SRS indicator does not come on after you turn the ignition switch to the ON (II) position.
- If the indicator stays on after the engine starts.
- If the indicator comes on or flashes on and off while you drive.

You will also see a “CHECK AIRBAG SYSTEM” message on the multi-information display (see page 80).

If you see any of these indications, the airbag system components may not work properly when you need them.

⚠WARNING

Ignoring the SRS indicator can result in serious injury or death if the airbag systems or tensioners do not work properly.

Have your vehicle checked by a dealer as soon as possible if the SRS indicator alerts you to a possible problem.

How the Side Airbag Off Indicator Works

U.S. Canada





This indicator alerts you that the passenger's side airbag has been automatically shut off. It does ***not*** mean there is a problem with your side airbags.

When you turn the ignition switch to the ON (II) position, the indicator should come on for several seconds and then go off (see page 66). If it doesn't come on, stays on, or comes on while driving without a passenger in the front seat, have the system checked.

You will also see a “PASSENGER SIDE AIRBAG OFF” message on the multi-information display (see page 80).

How the Passenger Airbag Off Indicator Works

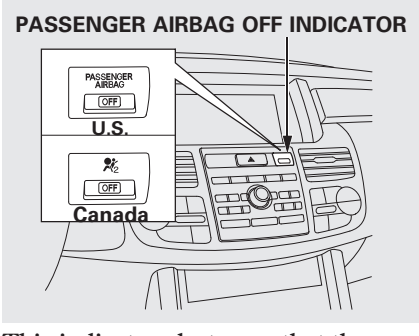

This indicator alerts you that the passenger's front airbag has been shut off because weight sensors detect about 65 lbs (29 kg) or less (the weight of an infant or small child) on the front passenger's seat. It does ***not mean*** there is a problem with the airbag.

Be aware that objects placed on the front seat can cause the indicator to come on.

If no weight is detected on the front seat, the airbag will be automatically shut off. However, the indicator will not come on.

The passenger airbag off indicator may come on and off repeatedly if the total weight on the seat is near the airbag cutoff threshold.

If an adult or teenage passenger is riding in front, move the seat as far to the rear as possible, and have the passenger sit upright and wear the seat belt properly.

If the indicator comes on with no front seat passenger and no objects on the seat, or with an adult riding there, something may be interfering with the weight sensors. Look for and remove:

- Any items under the front passenger's seat.
- Any object(s) hanging on the seat or in the seat-back pocket.
- Any object(s), such as a folded-down back seat, that are touching the rear of the seat-back.

If no obstructions are found, have your vehicle checked by a dealer as soon as possible.

Airbag Service
Your airbag systems are virtually maintenance free, and there are no parts you can safely service. However, you must have your vehicle serviced if:

- ***An airbag ever inflates.*** Any airbag that has deployed must be replaced along with the control unit and other related parts. Any seat belt tensioner that activates must also be replaced.

  We recommend against the use of salvaged airbag system components, including the airbag, tensioners, sensors, and control unit.

  Do not try to remove or replace any airbag by yourself. This must be done by an authorized dealer or a knowledgeable body shop.

- ***The SRS indicator alerts you to a problem.*** Take your vehicle to an authorized dealer as soon as possible. If you ignore this indication, your airbags may not operate properly.

- ***If your vehicle has a moderate to severe impact.*** Even if your airbags do not inflate, your dealer should inspect the driver's seat position sensor, the front passenger's weight sensors, the front seat belt tensioners, and all seat belts and their anchor worn during a crash to make sure they are operating properly.

Additional Safety Precautions

- ***Do not attempt to deactivate your airbags.*** Together, airbags and seat belts provide the best protection.
- ***Do not tamper with airbag components or wiring for any reason.*** Tampering could cause the airbags to deploy, possibly causing very serious injury.
- ***Do not expose the front passenger's seat-back to liquid.*** If water or another liquid soaks into a seat-back, it can prevent the side airbag cutoff system from working properly.
- ***Do not remove or modify a front seat without consulting your dealer.*** This could make the driver's seat position sensor or the front passenger's weight sensors ineffective. If it is necessary to remove or modify a front seat to accommodate a person with disabilities, first contact Acura Client Relations. In the US, call 800-382-2238, and in Canada, call 888-9-ACURA-9.



Children depend on adults to protect them. However, despite their best intentions, many adults do not know how to *properly* protect child passengers.

If you have children, or ever need to drive with a child in your vehicle, be sure to read this section. It begins with important general guidelines, then presents special information for infants, small children, and larger children.

All Children Must Be Restrained

Each year, many children are injured or killed in vehicle crashes because they are either unrestrained or not properly restrained. In fact, traffic collisions are the number one cause of the death of children aged 12 and under.

To reduce the number of child deaths and injuries, every state, Canadian province and territory requires that infants and children be properly restrained when they ride in a vehicle.

Infants and small children must be restrained in an approved child seat that is properly secured to the vehicle (see pages 41 – 52).

⚠ WARNING

Children who are unrestrained or improperly restrained can be seriously injured or killed in a crash.

Any child too small for a seat belt should be properly restrained in a child seat. A larger child should be properly restrained with a seat belt and use a booster seat if necessary.

Larger children must be restrained with a lap/shoulder belt and ride on a booster seat until the seat belt fits them properly (see pages 53 – 56).

All Children Should Sit in a Back Seat

According to crash statistics, children of all ages and sizes are safer when they are restrained in a back seat.

The National Highway Traffic Safety Administration and Transport Canada recommend that all children aged 12 and under be properly restrained in a back seat. Some states have laws restricting where children may ride.

Children who ride in back are less likely to be injured by striking interior vehicle parts during a collision or hard braking. Also, children cannot be injured by an inflating front airbag when they ride in the back.

The Passenger's Front Airbag Can Pose Serious Risks

Front airbags have been designed to help protect adults in a moderate to severe frontal collision. To do this, the passenger's front airbag is quite large, and it can inflate with enough force to cause very serious injuries.

Even though your vehicle has an advanced front airbag system that automatically turns the passenger's front airbag off under certain circumstances (see page 33), please follow these guidelines:

Infants

Never put a rear-facing child seat in the front seat of a vehicle equipped with a passenger's front airbag. If the airbag inflates, it can hit the back of the child seat with enough force to kill or very seriously injure an infant.

Small Children

Placing a forward-facing child seat in the front seat of a vehicle equipped with a passenger's front airbag can be hazardous. If the vehicle seat is too far forward, or the child's head is thrown forward during a collision, an inflating front airbag can strike the child with enough force to kill or very seriously injure a small child.

Larger Children

Children who have outgrown child seats are also at risk of being injured or killed by an inflating passenger's front airbag. Whenever possible, larger children should sit in the back seat, on a booster seat if needed, and be properly restrained with a seat belt (see page 53 for important information about protecting larger children).

CONTINUED

To remind you of the passenger's front airbag hazards, and that children must be properly restrained in a back seat, your vehicle has warning labels on the dashboard (U.S. models) and on the front visors. Please read and follow the instructions on these labels.

U.S. Models

SUN VISORS





DASHBOARD



Canadian Models

SUN VISORS

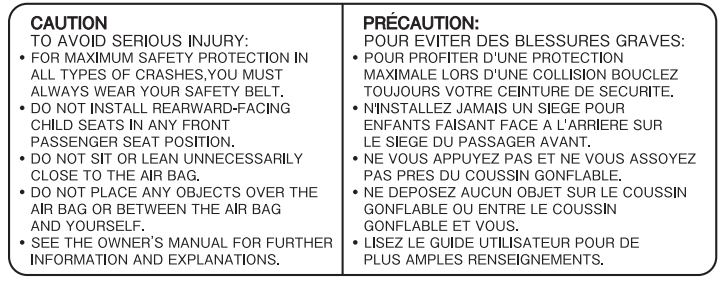

If You Must Drive with Several Children

Your vehicle has a back seat where children can be properly restrained. If you ever have to carry a group of children, and a child must ride in front:

- Place the largest child in the front seat, provided the child is large enough to wear the lap/shoulder belt properly (see page 53).
- Move the vehicle seat as far to the rear as possible (see page 134).
- Have the child sit upright and well back in the seat (see page 17).
- Make sure the seat belt is properly positioned and secured (see page 15).

If a Child Requires Close Attention

Many parents say they prefer to put an infant or a small child in the front passenger seat so they can watch the child, or because the child requires attention.

Placing a child in the front seat exposes the child to hazards in a frontal collision, and paying close attention to a child distracts the driver from the important tasks of driving, placing both of you at risk.

If a child requires close physical attention or frequent visual contact, we strongly recommend that another adult ride with the child in a back seat. The back seat is far safer for a child than the front.

Additional Safety Precautions

- ***Never hold an infant or child on your lap.*** If you are not wearing a seat belt in a crash, you could be thrown forward and crush the child against the dashboard or a seat-back. If you are wearing a seat belt, the child can be torn from your arms and be seriously hurt or killed.
- ***Never put a seat belt over yourself or a child.*** During a crash, the belt could press deep into the child and cause serious or fatal injuries.
- ***Never let two children use the same seat belt.*** If they do, they could be very seriously injured in a crash.
- ***Use the childproof door locks to prevent children from opening the rear doors.*** This can prevent children from accidentally falling out (see page 127).
- ***Make sure any unused seat belt that a child can reach is buckled, the lockable retractor is activated, and the belt is fully retracted and locked.*** If a child wraps a loose seat belt around their neck, they can be seriously or fatally injured. (See pages 50 and 51 for how to activate and deactivate the lockable retractor.)
- ***Do not leave children alone in a vehicle.*** Leaving children without adult supervision is illegal in most states, Canadian provinces/ territories and can be very hazardous.

  For example, infants and small children left in a vehicle on a hot day can die from heatstroke. A child left alone with the key in the ignition switch can accidentally set the vehicle in motion, possibly injuring themselves or others.
- ***Lock all doors and the tailgate when your vehicle is not in use.*** Children who play in vehicles can accidentally get trapped inside. Teach your children not to play in or around vehicles.
- ***Keep vehicle keys/remote transmitters out of the reach of children.*** Even very young children learn how to unlock vehicle doors, turn on the ignition switch, and open the tailgate, which can lead to accidental injury or death.

Protecting Infants

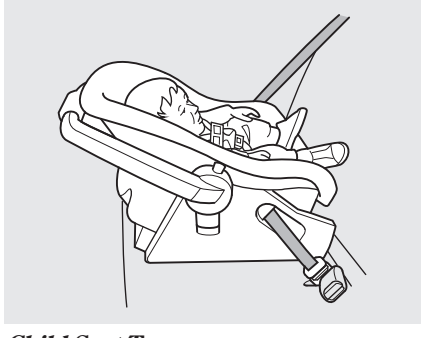

Child Seat Type

An infant must be properly restrained in a rear-facing, reclining child seat until the child reaches the seat maker's weight or height limit for the seat, and the child is at least one year old.

Only a rear-facing child seat provides proper support for a baby's head, neck, and back.

Two types of seats may be used: a seat designed exclusively for infants, or a convertible seat used in the rear-facing, reclining mode.

Do not put a rear-facing child seat in a forward-facing position. If placed facing forward, an infant could be very seriously injured during a frontal collision.

Rear-facing Child Seat Placement

A rear-facing child seat can be placed in any seating position in the back seat, but not in the front. ***Never put a rear-facing child seat in the front seat.***

If the passenger's front airbag inflates, it can hit the back of the child seat with enough force to kill or seriously injure an infant.

When properly installed, a rear-facing child seat may prevent the driver or a front passenger from moving their seat as far back as recommended, or from locking their seat-back in the desired position.

It could also interfere with proper operation of the passenger's advanced front airbag system.

CONTINUED

In any of these situations, we strongly recommend that you install the child seat directly behind the front passenger's seat, move the seat as far forward as needed, and leave it unoccupied. Or, you may wish to get a smaller rear-facing child seat.

⚠WARNING

Placing a rear-facing child seat in the front seat can result in serious injury or death during a crash.

Always place a rear-facing child seat in the back seat, not the front.

Protecting Small Children

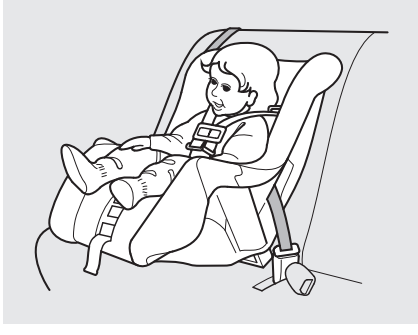

Child Seat Type

Many states, Canadian provinces and territories allow a child one year of age or older who also meets the minimum size and weight requirements to transition from a rear-facing child seat to a forward facing seat. Know the requirements where you are driving and follow the child seat instructions. Many experts recommend use of a rear-facing seat up to age two, if the child's height and weight are appropriate for a rear-facing seat.

Of the different seats available, we recommend those that have a five-point harness system as shown.

We also recommend that a small child use the child seat until the child reaches the weight or height limit for the seat.

Child Seat Placement
We strongly recommend placing a forward-facing child seat in a back seat, not the front.

Placing a forward-facing child seat in the front seat of a vehicle equipped with a passenger's airbag can be hazardous. If the vehicle seat is too far forward, or the child's head is thrown forward during a collision, an inflating airbag can strike the child with enough force to cause very serious or fatal injuries.

Even with advanced front airbags that automatically turn the passenger's front airbag off (see page 33), a back seat is the safest place for a small child.

If it is necessary to put a forward-facing child seat in the front, move the vehicle seat as far to the rear as possible, and be sure the child seat is firmly secured to the vehicle and the child is properly strapped in the seat.

⚠WARNING

Placing a forward-facing child seat in the front seat can result in serious injury or death if the front airbag inflates.

If you must place a forward-facing child seat in front, move the vehicle seat as far back as possible, and properly restrain the child.

Most child seats are LATCH-compatible (Lower Anchors and Tethers for CHildren). Some have a rigid-type connector, while others have a flexible-type connector. Both are equally easy to use. Some existing and previously owned child seats can only be installed using the seat belt. Whichever type you choose, follow the child seat manufacturer's use and care instructions as well as the instructions in this manual. Proper installation is key to maximizing your child's safety.

In seating positions and vehicles not equipped with LATCH, a LATCH compatible child seat can be installed using the seat belt and a top tether for added security. This is because all child seats are required to be designed so that they can be secured with a lap belt or the lap part of a lap/shoulder belt.

In addition, the child seat manufacturer may advise that a seat belt be used to attach a LATCH-compatible seat once a child reaches a specified weight. Please read the child seat owner's manual for proper installation instructions.

Important considerations when selecting a child seat

Make sure the child seat meets the following three requirements:

- The child seat is the correct type and size for the child.
- The child seat is the correct type for the seating position.
- The child seat is compliant with Federal Motor Vehicle Safety Standard 213 or Canadian Motor Vehicle Safety Standard 213.

After selecting a proper child seat and a good place to install the seat, there are three main steps in installing the seat:

1. ***Properly secure the child seat to the vehicle.*** All child seats must be secured to the vehicle with the lap part of a lap/shoulder belt or with the LATCH (Lower Anchors and Tethers for CHildren) system. A child whose seat is not properly secured to the vehicle can be endangered in a crash.
2. ***Make sure the child seat is firmly secured.*** After installing a child seat, push and pull the seat forward and from side-to-side to verify that it is secure.

A child seat secured with a seat belt should be installed as firmly as possible. However, it does not need to be “rock solid.” Some side-to-side movement can be expected and should not reduce the child seat's effectiveness.

If the child seat is not secure, try installing it in a different seating position, or use a different style of child seat that can be firmly secured.

3. ***Secure the child in the child seat.*** Make sure the child is properly strapped in the child seat according to the child seat maker's instructions. A child who is not properly secured in a child seat can be seriously injured in a crash.

The following pages provide guidelines on how to properly install a child seat. A forward-facing child seat is used in all examples, but the instructions are the same for rear-facing child seats.

Installing a Child Seat with LATCH

Your vehicle is equipped with LATCH (Lower Anchors and Tethers for CHildren) at the rear seats to secure a child seat in any seating position: one in each outer seating position, or one in the center.

The five lower anchors are located between the seat-back and seat bottom, and are to be used only with a child seat designed for use with LATCH.

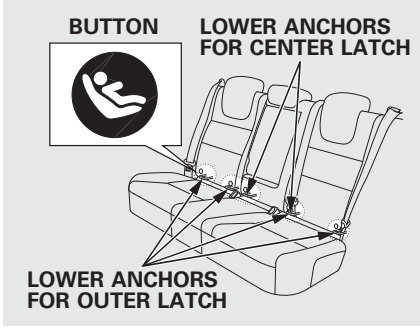

The location of each lower anchor is indicated by a small button above the anchor point.

When you install a child seat in the rear center seating position, use the center LATCH as shown in the illustration. To install a child seat in the outer seating position, use either LATCH. You can install up to two child seat at a time with outer LATCH.

Using the Outer LATCH

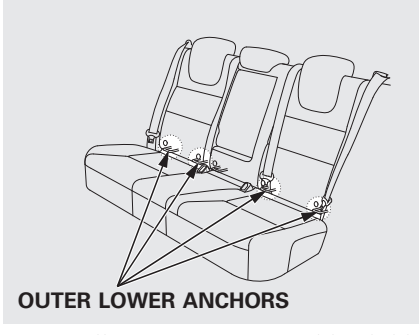

To install a LATCH-compatible child seat in either of the rear outer seats:

1. Move the seat belt buckle or tongue away from the lower anchors.
2. Make sure there are no objects near the anchors that could prevent a secure connection between the child seat and the anchors.

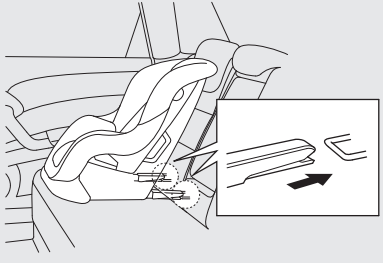

Rigid type

3. Place the child seat on the vehicle seat, then attach the seat to the lower anchors according to the child seat maker's instructions.

   Some LATCH-compatible seats have a rigid-type connector as shown above.

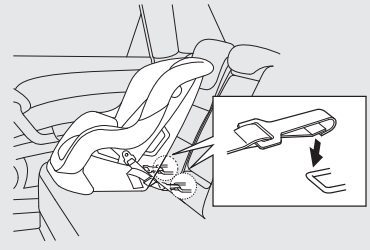

Flexible type

Other LATCH-compatible seats have a flexible-type connector as shown above.

4. Whatever type you have, follow the child seat maker's instructions for adjusting or tightening the fit.
5. Remove the cargo area cover, and place it on the cargo area floor (see page 160).

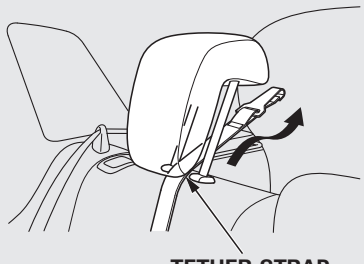

6. Lift the head restraint (see page 135), then route the tether strap through the legs of the head restraint and over the seat-back, making sure the strap is not twisted.

CONTINUED

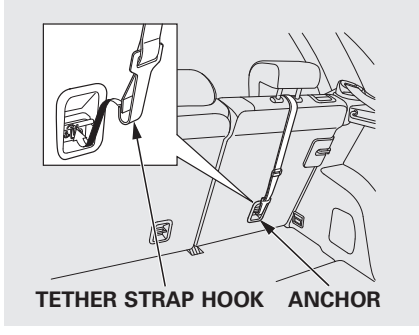

7. Attach the tether strap hook to the tether anchor, then tighten the strap as instructed by the child seat maker.
8. Push and pull the child seat forward and from side-to-side to verify that it is secure.

Using the Center LATCH

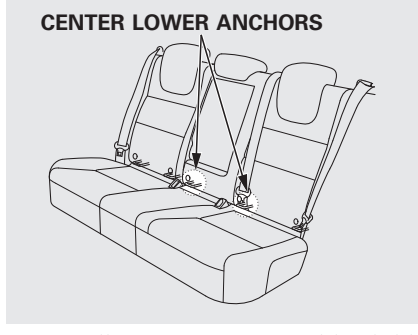

To install a LATCH-compatible child seat in the rear center seating position, use the center lower anchors as shown above.

Remove the head restraint (see page 136). Make sure the removed head restraint is secured in the cargo area. Reinstall the head restraint when the child seat is removed.

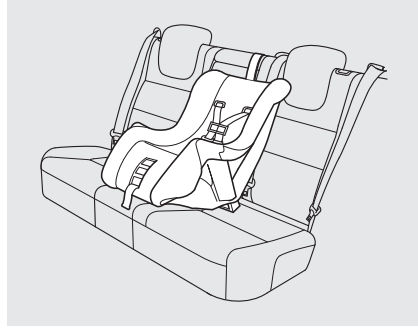

Follow step 1 through 8 as described previously to secure the child seat.

When you install the child seat in the rear center seating position, you cannot use the seat belt behind the driver's seat.

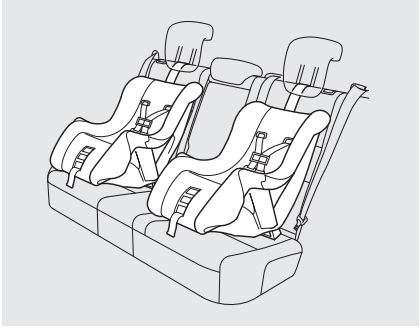

If you want to install two child seats in the back seats, place each child seat in the outer seat, as shown in the above illustration.

Do not attach two child seat connectors to a single lower anchor at a time.

The LATCH system or the child seats might be damaged if you try to install three child seats in the rear seats.

Installing a Child Seat with a Lap/ Shoulder Belt
When not using the LATCH system, all child seats must be secured to the vehicle with the lap part of a lap/ shoulder belt.

In addition, the lap/shoulder belts in all seating positions except the driver's have a lockable retractor that must be activated to secure a child seat.

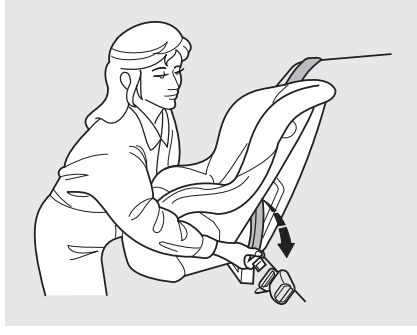

1. With the child seat in the desired seating position, route the belt through the child seat according to the seat maker's instructions, then insert the latch plate into the buckle and remove any slack from the lap portion of the belt.

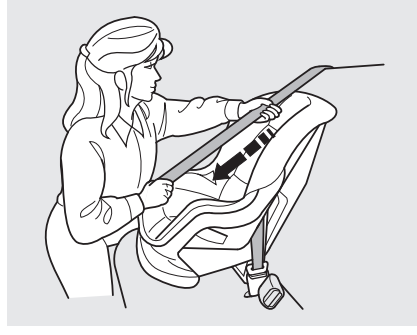

2. To activate the lockable retractor, slowly pull the shoulder part of the belt all the way out until it stops, then let the belt feed back into the retractor.
3. After the belt has retracted, tug on it. If the belt is locked, you will not be able to pull it out. If you can pull the belt out, it is not locked, and you will need to repeat these steps.

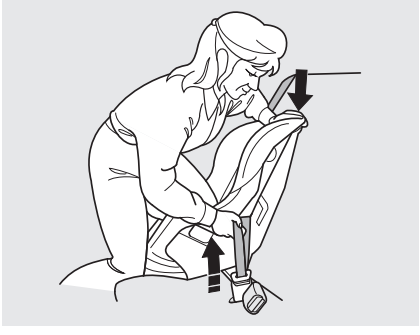

4. After confirming that the belt is locked, grab the shoulder part of the belt near the buckle, and pull up to remove any slack from the lap part of the belt. Remember, if the lap part of the belt is not tight, the child seat will not be secure.

   To remove slack, it may help to put weight on the child seat, or push on the back of the seat while pulling up on the belt.



5. Push and pull the child seat forward and from side-to-side to verify that it is secure enough to stay upright during normal driving maneuvers. If the child seat is not secure, unlatch the belt, allow it to retract fully, then repeat these steps.

To deactivate the lockable retractor and remove a child seat, unlatch the buckle, unroute the seat belt, and let the belt fully retract.

Installing a Child Seat with a Tether

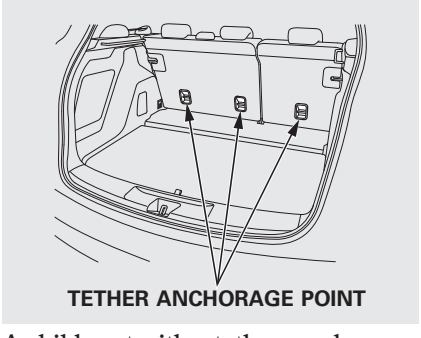

A child seat with a tether can be installed in any seating position in the back seat.

Since a tether can provide additional security to the lap/shoulder belt installation, we recommend using a tether whenever one is required or available.

CONTINUED

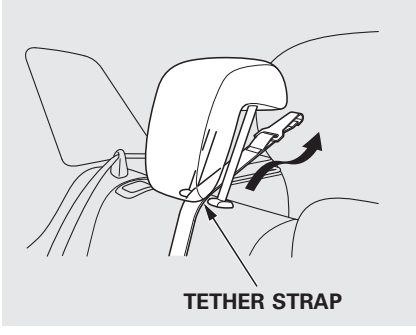

1. Remove the cargo area cover, and place it on the cargo area floor (see page 160).

2. (Outer seating position)
   After properly securing the child seat (see page 50), lift the head restraint, then route the tether strap over the seat-back and through the head restraint legs.

   (Rear center seating position)
   Remove the head restraint (see page 136). Make sure the removed head restraint is secured in the cargo area. Reinstall the head restraint when the child seat is removed.

   After properly securing the child seat (see page 50), route the tether strap over the top of the seat-back.

   When you install the child seat in the rear center seating position, you cannot use the seat belt behind the driver's seat.

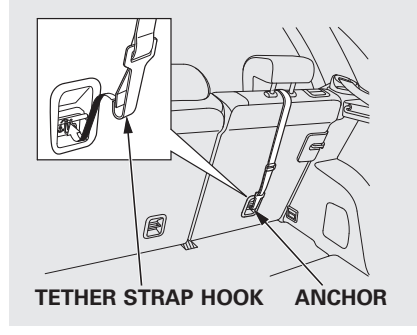

3. Attach the tether strap hook to the anchor, making sure the tether strap is not twisted.
4. Tighten the strap according to the seat maker's instructions.

   If the tether strap is too long and cannot be tightened firmly, find a route where the strap can be tightened securely.

When a child reaches the recommended weight or height limit for a forward-facing child seat, the child should sit in a back seat on a booster seat and wear a lap/shoulder belt.

The following pages give instructions on how to check proper seat belt fit, what kind of booster seat to use if one is needed, and important precautions for a child who must sit in front.

⚠WARNING

Allowing a child age 12 or under to sit in front can result in injury or death if the passenger's front airbag inflates.

If a child must ride in front, move the vehicle seat as far back as possible, use a booster seat if needed, have the child sit up properly and wear the seat belt properly.

Checking Seat Belt Fit

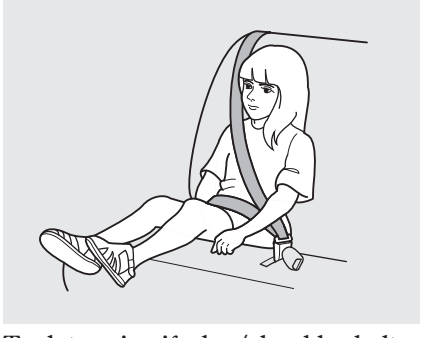

To determine if a lap/shoulder belt properly fits a child, have the child put on the seat belt, then ask yourself:

1. Does the child sit all the way back against the seat?
2. Do the child's knees bend comfortably over the edge of the seat?

CONTINUED

3. Does the shoulder belt cross between the child's neck and arm?
4. Is the lap part of the belt as low as possible, touching the child's thighs?
5. Will the child be able to stay seated like this for the whole trip?

If you answer yes to all these questions, the child is ready to wear the lap/shoulder belt correctly. If you answer no to any question, the child needs to ride on a booster seat.

Using a Booster Seat



A child who has outgrown a forward-facing child seat should ride in a back seat and use a booster seat until the lap/shoulder belt fits them properly without the booster.

Some states, Canadian provinces and territories also require children to use a booster seat until they reach a given age or weight (e.g., 6 years or 60 lbs). Be sure to check current laws in the states, provinces and territories where you intend to drive.

Booster seats can be high-back or low-back. Whichever style you select, make sure the booster seat meets federal safety standards (see page 44) and that you follow the booster seat maker's instructions.

If a child who uses a booster seat must ride in front, move the vehicle seat as far back as possible and be sure the child is wearing the seat belt properly.

A child may continue using a booster seat until the tops of their ears are even with the top of the vehicle's or booster's seat-back. A child of this height should be tall enough to use the lap/shoulder belt without a booster seat.

When Can a Larger Child Sit in Front

The National Highway Traffic Safety Administration and Transport Canada recommend that all children aged 12 and under be properly restrained in a back seat.

If the passenger's front airbag inflates in a moderate to severe frontal collision, the airbag can cause serious injuries to a child who is unrestrained, improperly restrained, sitting too close to the airbag, or out of position.

A side airbag also poses risks. If any part of a larger child's body is in the path of a deploying side airbag, the child could receive possibly serious injuries.

Of course, children vary widely. And while age may be one indicator of when a child can safely ride in front, there are other important factors you should consider.

Physical Size

Physically, a child must be large enough for the lap/shoulder belt to properly fit (see pages 15 and 53). If the seat belt does not fit properly, with or without the child sitting on a booster seat, the child should not sit in front.

Maturity

To safely ride in front, a child must be able to follow the rules, including sitting properly, and wearing the seat belt properly throughout a ride.

CONTINUED

If you decide that a child can safely ride up front, be sure to:

- Carefully read the owner's manual, and make sure you understand all seat belt instructions and all safety information.
- Move the vehicle seat to the rear-most position.
- Have the child sit up straight, back against the seat, and feet on or near the floor.
- Check that the child's seat belt is properly and securely positioned.
- Supervise the child. Even mature children sometimes need to be reminded to fasten the seat belts or sit properly.

Additional Safety Precautions

- ***Do not let a child wear a seat belt across the neck.*** This could result in serious neck injuries during a crash.
- ***Do not let a child put the shoulder part of a seat belt behind the back or under the arm.*** This could cause very serious injuries during a crash. It also increases the chance that the child will slide under the belt in a crash and be injured.
- ***Two children should never use the same seat belt.*** If they do, they could be very seriously injured in a crash.
- ***Do not put any accessories on a seat belt.*** Devices intended to improve a child's comfort or reposition the shoulder part of a seat belt can make the belt less effective and increase the chance of serious injury in a crash.

Your vehicle's exhaust contains carbon monoxide gas. Carbon monoxide should not enter the vehicle in normal driving if you maintain your vehicle properly and follow the information on this page.

Have the exhaust system inspected for leaks whenever:

- The vehicle is raised for an oil change.
- You notice a change in the sound of the exhaust.
- The vehicle was in a collision that may have damaged the underside.

⚠WARNING

Carbon monoxide gas is toxic. Breathing it can cause unconsciousness and even kill you.

Avoid any enclosed areas or activities that expose you to carbon monoxide.

High levels of carbon monoxide can collect rapidly in enclosed areas, such as a garage. Do not run the engine with the garage door closed. Even with the door open, run the engine only long enough to move the vehicle out of the garage.

With the tailgate open, airflow can pull exhaust gas into your vehicle's interior and create a hazardous condition. If you must drive with the tailgate open, open all the windows, and set the climate control system as shown below.

If you must sit in your parked vehicle with the engine running, even in an unconfined area, adjust the climate control system as follows:

1. Select the fresh air mode.
2. Select the  mode.
3. Set the fan speed to high.
4. Set the temperature control to a comfortable setting.

These labels are in the locations shown. They warn you of potential hazards that could cause serious injury or death. Read these labels carefully.

If a label comes off or becomes hard to read (except for the U.S. dashboard label which may be removed by the owner), contact your dealer for a replacement.

DASHBOARD

U.S. models

This Vehicle is Equipped with Advanced Air Bags

Even with Advanced Air Bags

Children can be killed or seriously injured by the air bag.
The back seat is the safest place for children.
Never put a rear-facing child seat in the front.
Always use seat belts and child restraints.
See owner's manual for more information about air bags.

To be removed by owner only.

SUN VISOR

U.S. models only

AIR BAG WARNING

FLIP VISOR OVER

WARNING

EVEN WITH ADVANCED AIR BAGS

- Children can be killed or seriously injured by the air bag
- The back seat is the safest place for children
- Never put a rear-facing child seat in the front
- Always use seat belts and child restraints
- See owner's manual for more information about air bags

Canadian models

CAUTION
TO AVOID SERIOUS INJURY:
- FOR MAXIMUM SAFETY PROTECTION IN ALL TYPES OF CRASHES,YOU MUST ALWAYS WEAR YOUR SAFETY BELT.
- DO NOT INSTALL REARWARD-FACING CHILD SEATS IN ANY FRONT PASSENGER SEAT POSITION.
- DO NOT SIT OR LEAN UNNECESSARILY CLOSE TO THE AIR BAG.
- DO NOT PLACE ANY OBJECTS OVER THE AIR BAG OR BETWEEN THE AIR BAG AND YOURSELF.
- SEE THE OWNER'S MANUAL FOR FURTHER INFORMATION AND EXPLANATIONS.

PRECAUTIONS:
POUR EVITER DES BLESSURES GRAVES:
- POUR PROFITER D'UNE PROTECTION MAXIMALE LORS D'UNE COLLISION BOUCLEZ TOUJOURS VOTRE CEINTURE DE SECURITE.
- N'INSTALLEZ JAMAIS UN SIEGE POUR ENFANTS FAISANT FACE A L'ARRIERE SUR LE SIEGE DU PASSAGER AVANT.
- NE VOUS APPUYEZ PAS ET NE VOUS ASSOYEZ PAS PRES DU COUSSIN GONFLABLE.
- NE DEPOSEZ AUCUN OBJET SUR LE COUSSIN GONFLABLE OU ENTRE LE COUSSIN GONFLABLE ET VOUS.
- LISEZ LE GUIDE UTILISATEUR POUR DE PLUS AMPLES RENSEIGNEMENTS.

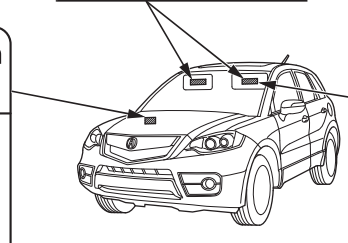

SUN VISORS

U.S. models only

WARNING: HIGHER ROLLOVER RISK

Avoid Abrupt Maneuvers and Excessive Speed.

Always Buckle Up.

See Owner's Manual For Further Information.

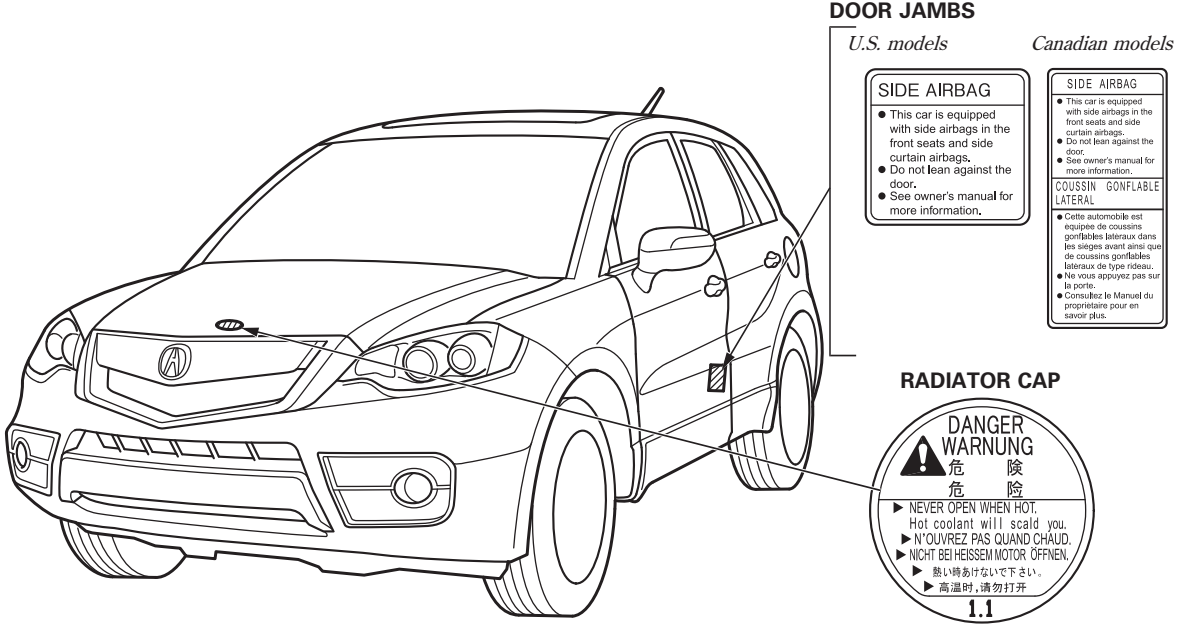
DOOR JAMBS
U.S. models
Canadian models
SIDE AIRBAG
● This car is equipped with side airbags in the front seats and side curtain airbags.
● Do not lean against the door.
● See owner's manual for more information.
SIDE AIRBAG
● This car is equipped with side airbags in the front seats and side curtain airbags.
● Do not lean against the door.
● See owner's manual for more information.
COUSSIN GONFLABLE LATERAL
● Cette automobile est équipée de coussins gonflables latéraux dans les sièges avant ainsi que de coussins gonflables latéraux de type rideau.
● Ne vous appuyez pas sur la porte.
● Consultez le Manuel du propriétaire pour en savoir plus.
RADIATOR CAP
DANGER
WARNUNG
危 険
危 険
▶ NEVER OPEN WHEN HOT.
Hot coolant will scald you.
▶ N'OUVREZ PAS QUAND CHAUD.
▶ NICHT BEI HEISSEM MOTOR ÖFFNEN.
▶ 熱い時あけないで下さい。
▶ 高温时,请勿打开
1.1

This section gives information about the controls and displays that contribute to the daily operation of your vehicle. All the essential controls are within easy reach.

Control Locations 62
Instrument Panel 63
Instrument Panel Indicators 64
Gauges 73
  Turbo Boost Meter 73
  Fuel Gauge 73
Multi-Information Display 74
  System Messages 79
  Customized Settings 82
Controls Near the Steering Wheel 113
Windshield Wipers and Washers 114
  Rear Window Wiper and Washer 115
Turn Signals and Headlights 116
Instrument Panel Brightness 120
Rear Window Defogger 121
Hazard Warning Button 121
Steering Wheel Adjustments 122
Keys and Locks 122
Immobilizer System 124
Ignition Switch 125
Door Locks 126
  Power Door Locks 126
  Childproof Door Locks 127
Tailgate 128
Remote Transmitter 130
Seats 134
  Front Seat Power Adjustments 134
  Head Restraints 135
  Armrests 138
  Folding the Rear Seats Down 138
Seat Heaters 141
Power Windows 142
Moonroof 144
Mirrors 146
  Adjusting the Power Mirrors 146
  Reverse Tilt Door Mirror 147
  Heated Mirrors 147
Driving Position Memory System 148
Parking Brake 150
Interior Lights 151
  Ceiling Lights 151
  Individual Map Lights 152
  Courtesy Lights 153
  Cargo Area Light 153
Interior Convenience Items 154
  Glove Box 155
  Front Door Pockets 155
  Beverage Holders 156
  Accessory Power Sockets 157
  Sun Visor 157
  Vanity Mirror 158
  Console Compartment 158
  Cargo Area Cover 160
  Coat Hook 161

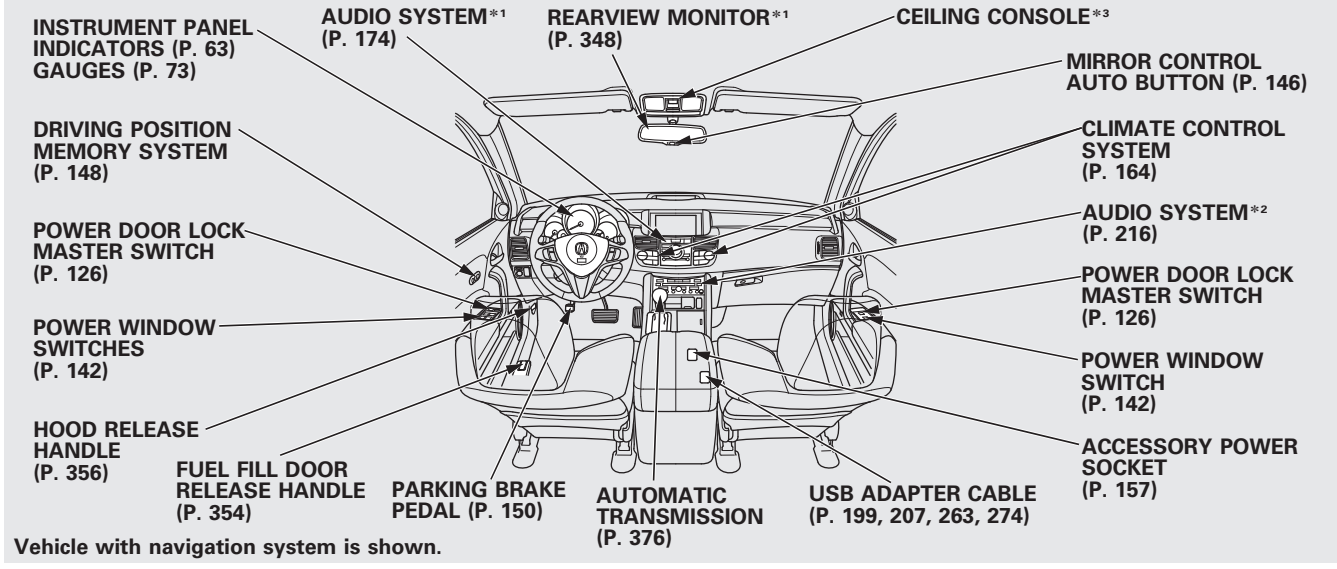

Vehicle with navigation system is shown.

*1: On models without navigation system.
*2: On models with navigation system.
*3: HomeLink® Buttons (P. 303)
Moonroof Switch (P. 144)
Front Ceiling Light Switch (P. 151)

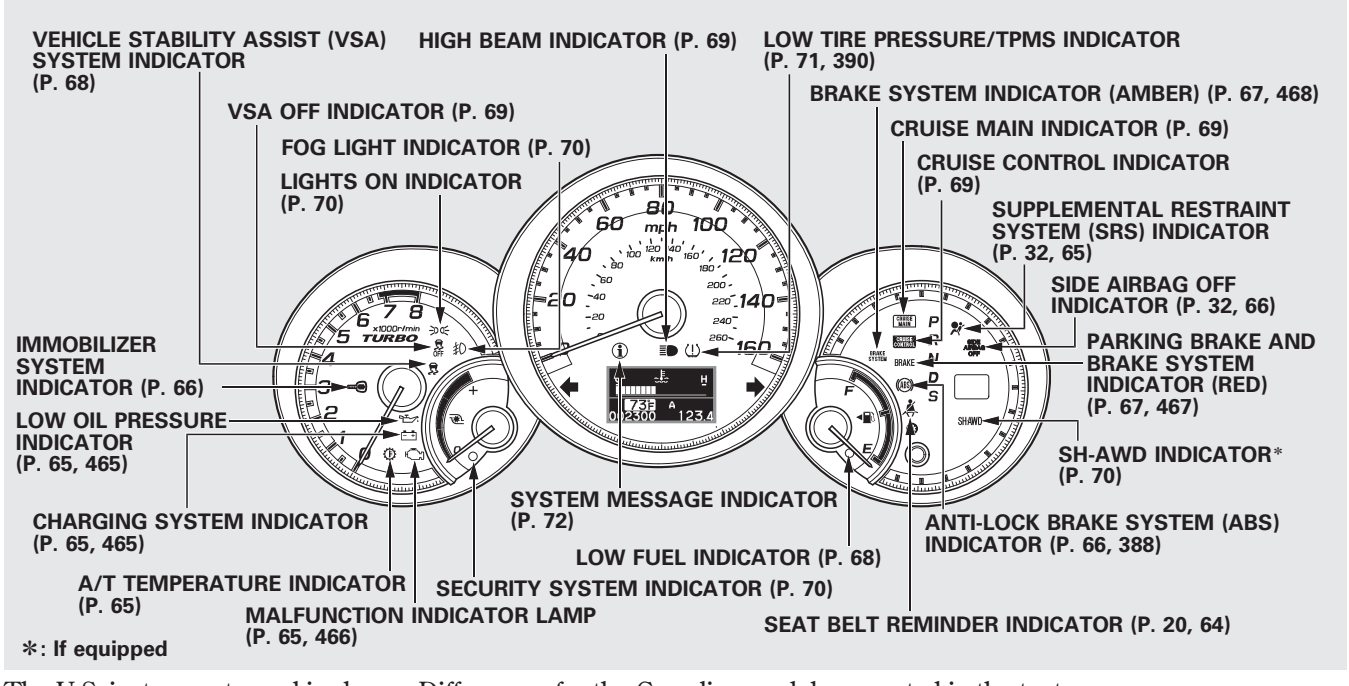

The U.S. instrument panel is shown. Differences for the Canadian models are noted in the text.

The instrument panel has many indicators that give you important information about your vehicle.



Seat Belt Reminder Indicator

This indicator reminds you and your passengers to fasten your seat belts.

If you turn the ignition switch to the ON (II) position before fastening your seat belts, the beeper sounds, and the indicator flashes. If you do not fasten your seat belts before the beeper stops, the indicator stops flashing but remains on.

If your front passenger does not fasten their seat belt, the indicator comes on about 6 seconds after the ignition switch is turned to the ON (II) position.

If either of you do not fasten your seat belt while driving, the beeper will sound and the indicator will flash again at regular intervals. For more information, see page 20.

You will also see a “FASTEN SEAT BELT” or “FASTEN PASSENGER SEAT BELT” message on the multi-information display.



Malfunction Indicator Lamp

You will also see a “CHECK EMISSION SYSTEM” message on the multi-information display. For more information, see page 466.



Low Oil Pressure Indicator

The engine can be severely damaged if this indicator flashes or stays on when the engine is running. For more information, see page 465.
You will also see a “OIL PRESSURE LOW” message on the multi-information display (see page 79).



Charging System Indicator

If this indicator comes on when the engine is running, the battery is not being charged, and you will also see a “CHECK CHARGING SYSTEM” message on the multi-information display. For more information, see page 465.



A/T Temperature Indicator

This indicator monitors the temperature of the automatic transmission fluid. If it comes on while driving, it means the transmission fluid temperature is too high. Pull to the side of the road when it is safe, shift to Park, and let the engine idle until the indicator goes out.

You will also see a “CHECK TRANSMISSION” message on the multi-information display (see page 80).

NOTICE

Continuing to drive with the A/T temperature indicator on may cause serious damage to the transmission.



Supplemental Restraint System (SRS) Indicator

This indicator comes on for several seconds when you turn the ignition switch to the ON (II) position. If it comes on at any other time, it indicates a potential problem with your front airbags. This indicator will also alert you to a potential problem with your airbag system components. You will also see a “CHECK AIRBAG SYSTEM” message on the multi-information display (see page 80). For more information, see page 32.

CONTINUED

U.S. Canada

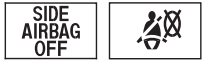

Side Airbag Off Indicator
This indicator comes on for several seconds when you turn the ignition switch to the ON (II) position. If it comes on at any other time, it indicates that the passenger's side airbag has automatically shut off. You will also see a “PASSENGER SIDE AIRBAG OFF” message on the multi-information display (see page 80). For more information, see page 32.



Anti-lock Brake System (ABS) Indicator

This indicator normally comes on for a few seconds when you turn the ignition switch to the ON (II) position, and when the ignition switch is turned to the START (III) position. If this indicator comes on at any other time, there is a problem in the ABS. If this happens, take the vehicle to your dealer to have it checked. With this indicator on, your vehicle still has normal braking ability but no anti-lock function. You will also see a “CHECK ABS SYSTEM” message on the multi-information display (see page 80). For more information, see page 388.



Immobilizer System Indicator

This indicator comes on briefly when you turn the ignition switch to the ON (II) position. It will then go off if you have inserted a properly coded ignition key. If it is not a properly coded key, the indicator blinks, and the engine's fuel system will be disabled (see page 124).

U.S. Canada



Parking Brake and Brake System Indicator (Red)
This indicator has two functions:

1. It comes on when you turn the ignition switch to the ON (II) position. It is a reminder to check the parking brake. Driving with the parking brake not fully released can damage the brakes and tires.

If you drive without releasing the parking brake, a beeper will sound, and you will also see a "RELEASE PARKING BRAKE" message on the multi-information display (see page 79).

2. If it stays on after you have fully released the parking brake while the engine is running, or if it comes on while driving, it can indicate a problem in the brake system. You will also see a "BRAKE FLUID LOW" or "CHECK BRAKE SYSTEM" message on the multi-information display. For more information, see page 467.

U.S. Canada



Brake System Indicator (Amber)
The brake system indicator (amber) normally comes on when you turn the ignition switch to the ON (II) position and goes off after the engine starts. If it comes on at any other time, there is a problem in the brake system including the electric vacuum pump. If this happens, have your vehicle checked by your dealer. For more information, see page 468.

You will also see a "CHECK BRAKE SYSTEM" message on the multi-information display (see page 79).

CONTINUED

Low Fuel Indicator

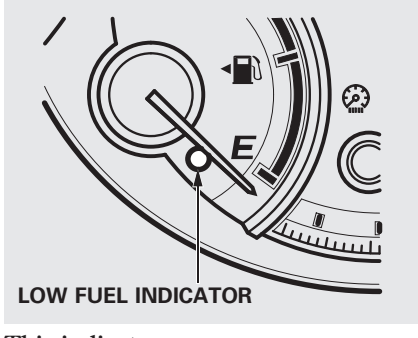

This indicator comes on as a reminder that you must refuel soon. When the indicator comes on, there are about 2.5 U.S. gal (9.5 L) of fuel remaining in the tank.

When the needle reaches E, there is a very small amount of fuel in the tank.

You will also see a “FUEL LOW” message on the multi-information display (see page 80).

NOTICE

Avoid driving with an extremely low fuel level. Running out of fuel could cause the engine to misfire, damaging the catalytic converter.

Vehicle Stability Assist (VSA) System Indicator

This indicator normally comes on for a few seconds when you turn the ignition switch to the ON (II) position.

It flashes when VSA is active (see page 395).

If it comes on and stays on at any other time, there is a problem with the VSA system. You will also see a “CHECK VSA SYSTEM” message on the multi-information display (see page 80). Take your vehicle to a dealer to have it checked. Without VSA, your vehicle still has normal driving ability, but will not have VSA traction and stability enhancement. For more information, see page 395.



VSA OFF Indicator

It comes on as a reminder that you have turned off the vehicle stability assist (VSA) system.

This indicator normally comes on for a few seconds when you turn the ignition switch to the ON (II) position. For more information, see page 395.



Cruise Main Indicator

This indicator comes on when you turn on the cruise control system by pressing the CRUISE button (see page 300).



Cruise Control Indicator

This indicator comes on when you set the cruise control. See page 300 for information on operating the cruise control.



High Beam Indicator

This indicator comes on with the high beam headlights. For more information, see page 117.

This indicator also comes on with reduced brightness when the daytime running lights (DRL) are on (see page 119).



Turn Signal and Hazard Warning Indicators

The left or right turn signal indicator blinks when you signal a lane change or turn. If an indicator does not blink or blinks rapidly, it usually means one of the turn signal bulbs is burned out (see pages 432 and 434). Replace the bulb as soon as possible, since other drivers cannot see that you are signaling.

When you press the hazard warning button, both turn signal indicators and all turn signals on the outside of the vehicle flash.

CONTINUED

Security System Indicator

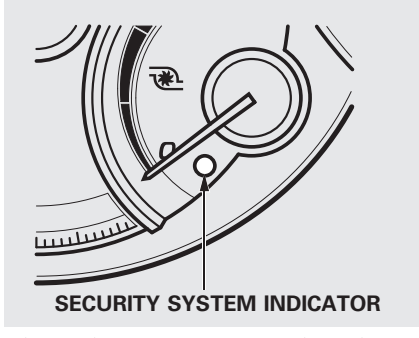

This indicator comes on when the security system is set. For more information, see page 294.

Lights On Indicator

This indicator reminds you that the exterior lights are on. It comes on when the light switch is in either the or position. If you turn the ignition switch to the ACCESSORY (I) or the LOCK (0) position without turning off the light switch, this indicator will remain on. A reminder chime will also sound when you open the driver's door and remove the key from the ignition switch.

Fog Light Indicator

This indicator comes on when you turn on the fog lights. For more information, see page 119.

Super Handling-All Wheel Drive (SH-AWD) Indicator

On SH-AWD models

This indicator normally comes on for a few seconds when you turn the ignition switch to the ON (II) position. If this indicator comes on at any other time, there is a problem in the SH-AWD system. You will also see a “CHECK SH-AWD SYSTEM” message on the multi-information display (see page 80). Take your vehicle to a dealer to have it checked. For more information, see page 385.

If this indicator blinks while driving, it indicates the differential temperature is too high.

You will also see an “SH-AWD DIFF TEMP. HIGH” message on the multi-information display (see page 80).

Pull to the side of the road when it is safe, shift to Park, and let the engine idle until the indicator goes out. If the indicator does not go out, take your vehicle to a dealer to have it checked.

For more information, see page 385.

NOTICE

Continuing to drive with the SH-AWD indicator blinking may cause serious damage to the system.



Low Tire Pressure/TPMS Indicator

This indicator normally comes on for a few seconds when you turn the ignition switch to the ON (II) position.

This indicator has two functions:

1. If it comes on while driving, it indicates that one or more of your vehicle's tires are significantly low on pressure.

You will also see a “CHECK TIRE PRESSURE” message on the multi-information display (see page 79).

Check the tire pressure monitor on the multi-information display and determine the cause (see page 392).

If this happens, pull to the side of the road when it is safe, check which tire has lost pressure on the multi-information display, and determine the cause. If it is because of a flat tire, have the flat tire repaired as soon as possible. If two or more tires are underinflated, call a professional towing service. For more information, see page 475.

CONTINUED

2. If this indicator begins to flash, there is a problem with the tire pressure monitoring system (TPMS). You will also see a "CHECK TPMS SYSTEM" message on the multi-information display. The indicator continues to flash for a while (approximately 1 minute), then stays on. If this happens, have your dealer check the system as soon as possible. For more information, see page 393.



System Message Indicator

This indicator comes on when there is a system message on the multi-information display. Press the INFO button on the steering wheel (see page 74) to see the message (see page 81).

Most of the time, this indicator comes on along with other indicators in the instrument panel such as the seat belt reminder indicator, SRS indicator, VSA system indicator, etc.

U.S. model is shown.

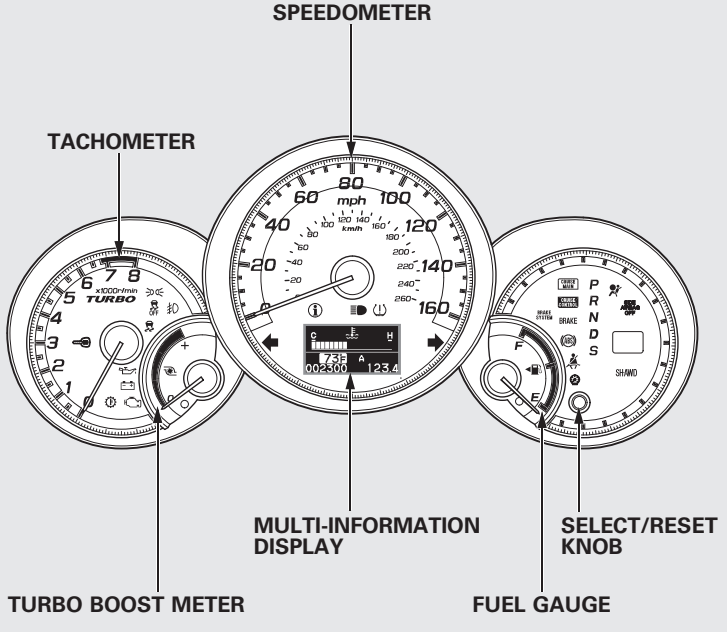

Turbo Boost Meter
When the turbo charger is activated, this meter shows the boost pressure.

Fuel Gauge
This shows how much fuel you have. It may show slightly more or less than the actual amount. The needle returns to the bottom after you turn off the ignition.

NOTICE

Avoid driving with an extremely low fuel level. Running out of fuel could cause the engine to misfire, damaging the catalytic converter.

The multi-information display in the instrument panel displays various information and messages when the ignition switch is in the ON (II) position. Some of the messages help you operate your vehicle more comfortably.
Others help to keep you aware of the periodic maintenance your vehicle needs for continued trouble-free driving.

When you open the driver's door, a “Welcome” message is shown on the multi-information display. When you turn the ignition switch from the ON (II) position to the ACCESSORY (I) position, a “Goodbye” message is shown on the display.

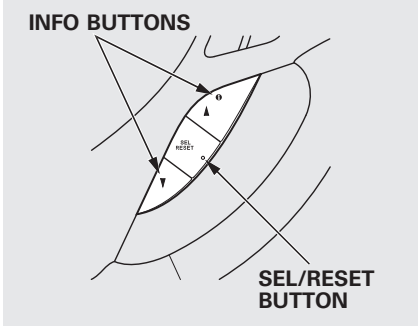

To change the display, press the SEL/RESET button or INFO (▲/▼) button on the steering wheel repeatedly until the desired information appears (see page 75).

You can also change the display by pressing the select/reset knob in the instrument panel.

When you turn the ignition switch to the ON (II) position, your last selection is displayed.

In the multi-information display, the system message is also displayed (see page 79) and you can customize your vehicle control settings (see page 82).

U.S. model is shown.

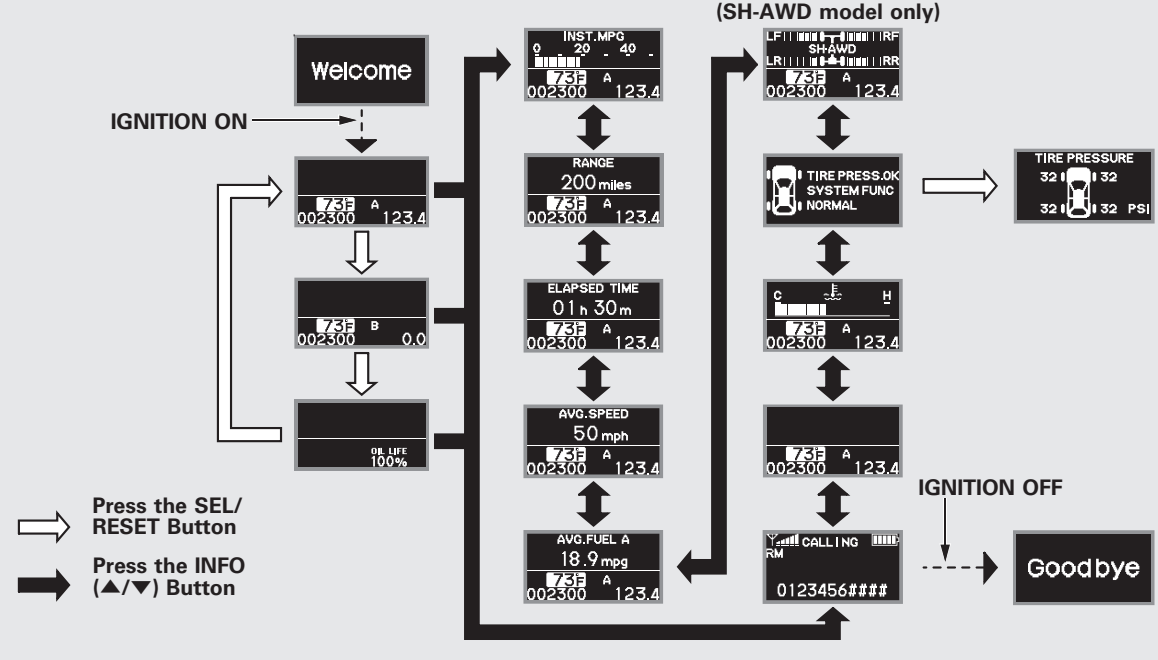

CONTINUED

Odometer
The odometer shows the total distance your vehicle has been driven. It measures miles in U.S. models and kilometers in Canadian models. It is illegal under U.S. federal law and Canadian provincial/territorial regulations to disconnect, reset, or alter the odometer with the intent to change the number of miles or kilometers indicated.

Trip Meter
This meter shows the number of miles (U.S.) or kilometers (Canada) driven since you last reset it. There are two trip meters: Trip A and Trip B. Each trip meter works independently, so you can keep track of two different distances.

To reset a trip meter, display it, then press and hold the SEL/RESET button until the number resets to "0.0".

When you reset Trip A, AVG. FUEL A is reset at the same time. When you reset Trip B, AVG. FUEL B is reset.

You can customize the Trip A and AVG. FUEL A reset condition on the multi-information display (see page 93).

Outside Temperature Display
This shows the outside temperature in Fahrenheit (U.S. models), or in Celsius (Canadian models).

The temperature sensor is in the front bumper. The temperature reading can be affected by heat reflection from the road surface, engine heat, and the exhaust from surrounding traffic. This can cause an incorrect temperature reading when your vehicle speed is under 19 mph (30 km/h). When you start your trip, the sensor is not fully acclimatized, therefore it may take several minutes until the proper temperature is displayed.

In certain weather conditions, temperature readings near freezing (32°F, 0°C) could mean that ice is forming on the road surface.

You can adjust the outside temperature display (see page 91).

Maintenance Minder™
The multi-information display in the instrument panel shows you the engine oil life and maintenance service items when the ignition switch is in the ON (II) position. This information helps to keep you aware of the periodic maintenance your vehicle needs for continued trouble-free driving. Refer to page 411 for more information.

INST. MPG (U.S. models)/INST. L/100 km (Canadian models)
This shows your instant fuel economy.

When you turn off the engine, INST. MPG or INST. L/100 km is also reset.

RANGE
This shows the estimated distance you can travel on the fuel remaining in the fuel tank. This distance is estimated from the fuel economy you received over the last several miles (U.S.) or kilometers (Canada), so it will vary with changes in speed, traffic, etc.

When the battery is disconnected, or you refuel, RANGE is also reset.

ELAPSED TIME
This shows the accumulated traveling time since you last reset it. When you turn the ignition switch to the ON (II) position, ELAPSED TIME is reset.

You can customize the ELAPSED TIME reset condition on the multi-information display (see page 95).

AVG. SPEED
This shows the average speed you are traveling in miles per hour (mph) for U.S. models or kilometers per hour (km/h) for Canadian models.

When you reset Trip A, AVG. SPEED is also reset.

AVG. FUEL A/B
This shows your vehicle's average fuel economy in mpg (U.S. models) or liter/100 km (Canadian models) since you last reset Trip A or Trip B.

You can customize the Trip A and AVG. FUEL A reset condition on the multi-information display (see page 93).

The average fuel economy will be reset when you reset the trip meter, or if the vehicle's battery goes dead or is disconnected.

CONTINUED

SH-AWD Torque Distribution Monitor
On SH-AWD models

This monitor shows how much torque is being delivered to each wheel. For more information, see page 384.

Tire Pressure Monitor
You can see the pressure of each tire in this monitor. If one or more tire pressure are low, inflate them to the correct pressure. For more information, see page 392.

Temperature Gauge
This shows the temperature of the engine's coolant. During normal operation, the reading should rise from the “C (Cold)” mark to about the middle of the gauge. In severe driving conditions, such as very hot weather or a long period of uphill driving, the reading may rise to near the “H (Hot)” mark of the gauge. If it reaches the “H” mark, pull safely to the side of the road. See page 463 for instructions and precautions on checking the engine's coolant system.

***Bluetooth*® HandsFreeLink®**
You can receive or make phone calls from your cell phone through your vehicle's *Bluetooth*® HandsFreeLink® (HFL) system without touching your cell phone.

To use the system, your cell phone and the HFL system must be linked. Not all cell phones are compatible with this system. Refer to page 313 for instructions on how to link your cell phone to HFL and how to receive or make phone calls, or visit the acura.com/handsfreelink website. In Canada, visit *www.acura.ca*, or call 1-(888) 9-HONDA-9.

System Messages
If there is a problem with your vehicle, for example, the engine oil level is low or a door is not fully closed, the multi-information display will show you the problem. It does this by interrupting the current display with one or more messages.

Here is a list of messages shown on the multi-information display:

 	See page 20
	See page 12
 U.S.  Canada	See page 67
 U.S.  Canada	See page 467
 U.S.  Canada	See page 467, 468

	See page 393
	See page 392
	See page 465
	See page 465
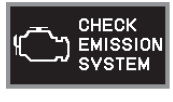	See page 466

CONTINUED

	See page 376
 SH-AWD model only	See page 385
 SH-AWD model only	See page 385
	See page 32
	See page 388

	See page 395
 U.S.  Canada	See page 375
 U.S.  Canada	See page 32
	See page 119
	See page 68

	See page 12
	See page 355
	See page 426
	See page 412
	See page 125

The system message(s) triggers the appropriate indicator(s) on the instrument panel, including the system message indicator, to come on. The system message indicator does not go off until the problem(s) is corrected.

You will also hear a beep when the system message comes on for the first time.

Most of the messages are displayed for about 5 seconds, and then the normal display returns. If there are several system messages to be shown, the display switches these messages every 5 seconds.

To switch the message(s) before 5 seconds have elapsed, press the INFO (▲/▼) button on the steering wheel.

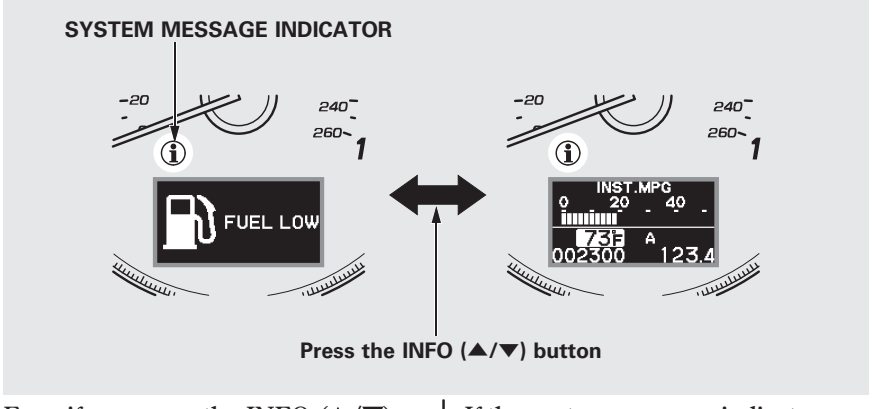

Even if you press the INFO (▲/▼) button, some messages stay on or come on again at regular intervals until the problem is corrected.

- FASTEN SEAT BELT
- FASTEN PASSENGER SEAT BELT
- RELEASE PARKING BRAKE
- DOOR & TAILGATE OPEN

If the system message indicator remains lit on the instrument panel, you can see the corresponding message(s) again by pressing the INFO (▲/▼) button repeatedly.

Customized Settings
With the multi-information display and the INFO (▲/▼) and SEL/RESET buttons on the right side of the steering wheel, you can customize some vehicle control settings.

To enter the customizing mode, press and hold the INFO (▲/▼) button for more than 3 seconds.

To change the settings, the ignition switch must be in the ON (II) position, and the vehicle must be stopped with the transmission in Park.

You cannot customize the settings under these conditions:

- If you turn the ignition switch to the ACCESSORY (I) or the LOCK (0) position.
- If you move the shift lever out of Park.

The first customizing menu is:

- DEFAULT ALL
- CHG SETTING

If you want the settings as they were when the vehicle left the factory, select “DEFAULT ALL,” as described on page 85.

If you want to change any vehicle control settings, select “CHG SETTING,” then press the SEL/RESET button (see page 86).

Refer to the table on the following pages about the settings you want to customize.

Customize Entry	Customize Group	Customize Menu	Description	Customize Setup	Page
CHG SETTING (P. 86)	METER SETUP (P. 88)	LANGUAGE SELECTION	Changes the language used in the display.	ENGLISH*	89
				FRENCH	
				SPANISH	
		ADJUST OUTSIDE TEMP. DISPLAY	Changes the outside temperature reading above or below its current reading.	−5°F ~ ±0°F* ~ 5°F	91
				−3°C ~ ±0°C* ~ 3°C	
		TRIP A & AVG. FUEL RESET with REFUEL	Causes trip meter A and the average fuel economy to reset when you refuel.	ON	93
				OFF*	
		ELAP. TIME RESET CONDITION	Resets the elapsed time of your current trip.	IGN RESET*	95
				TRIP A RESET	
				TRIP B RESET	
	LIGHTING SETUP (P. 97)	INTERIOR LIGHT DIMMING TIME	Changes how long (in seconds) the interior lights stay on after you close the doors.	15 sec	98
				30 sec*	
				60 sec	
		HEADLIGHT AUTO OFF TIMER	Changes how long (in seconds) the exterior lights stay on after you close the driver's door.	0 sec	100
				15 sec*	
				30 sec	
				60 sec	
	DOOR SETUP (P. 102)	AUTO DOOR LOCK	Changes when the system automatically locks the doors.	SHIFT FROM P	103
				WITH VEH SPEED*	
				OFF	

*: Default setting

CONTINUED

Customize Entry	Customize Group	Customize Menu	Description	Customize Setup	Page
CHG SETTING (P. 86)	DOOR SETUP (P. 102)	DOOR LOCK MODE	Changes which doors unlock with the remote transmitter on a first push.	DRIVER DOOR*	105
				ALL DOORS	
		KEYLESS LOCK ACKNOWLEDGEMENT	The exterior lights flash each time you press the LOCK or UNLOCK button. A beeper will also sound when you press the LOCK button twice.	ON*	107
				OFF	
		SECURITY RELOCK TIMER	Changes how long it takes (in seconds) for the doors to relock and the security system to set after you unlock but do not open the door.	30 sec*	109
				60 sec	
				90 sec	
		AUTO DOOR UNLOCK	Changes when the system automatically unlock the driver's/all of the doors.	DRIVER DOOR WITH SHIFT TO P*	111
				ALL DOORS WITH SHIFT TO P	
				DRIVER'S DOOR WITH IGN OFF	
				ALL DOORS WITH IGN OFF	
				OFF	
DEFAULT ALL			Returns all settings to the factory default.	SET	85
				EXIT	

*: Default setting

DEFAULT ALL

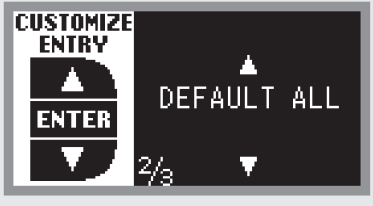

To enter the customizing mode, press and hold the INFO (▲/▼) button for more than 3 seconds.

If you want to set the default settings, press the INFO (▲/▼) button to select “DEFAULT ALL,” then press the SEL/RESET button.

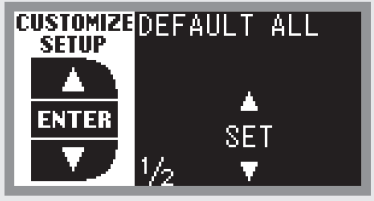

To set the default settings, press the INFO (▲/▼) button to select “SET” then press the SEL/RESET button.



When “DEFAULT ALL” is set, you will see the above display for several seconds, then the screen returns to “CUSTOMIZE ENTRY.”

CONTINUED



If “DEFAULT ALL” is not set, you will see the above display for several seconds, then the screen goes back to “CUSTOMIZE ENTRY.” Repeat the procedure to select “DEFAULT ALL.”

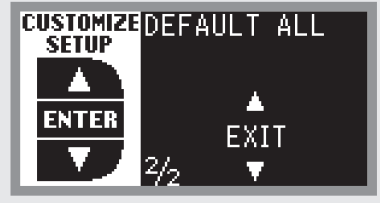

If you want to cancel “DEFAULT ALL,” select “EXIT,” then press the SEL/RESET button. The screen goes back to “CUSTOMIZE ENTRY.”

Change Settings

You can customize some of the vehicle control settings to your preference. Here are the settings you can customize:

- METER SETUP
- LIGHTING SETUP
- DOOR SETUP

While “CHG SETTING” in the “CUSTOMIZE ENTRY” is shown on the multi-information display, press the SEL/RESET button. The screen changes to “METER SETUP” in the “CUSTOMIZE GROUP.”

Each time you press the INFO (▲/▼) button, the screen changes as shown on the next page. Press the INFO (▲/▼) button, until you see the setup you want to customize, then press the SEL/RESET button to enter your selection.

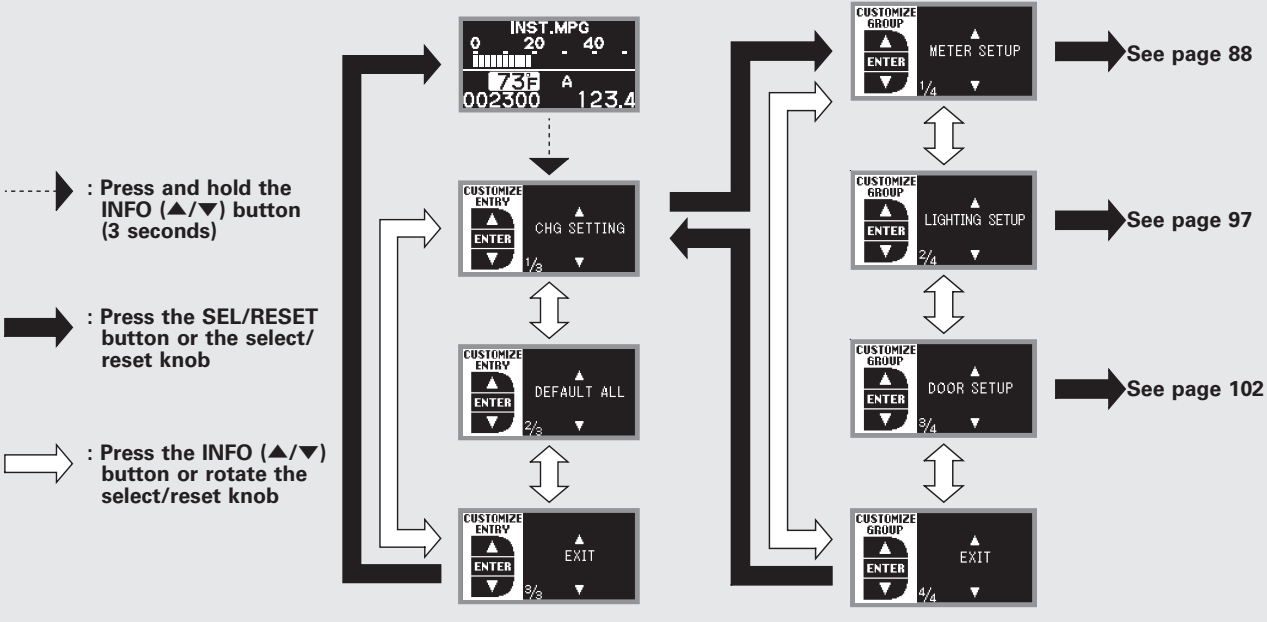
: Press and hold the INFO (▲/▼) button (3 seconds)
: Press the SEL/RESET button or the select/ reset knob
: Press the INFO (▲/▼) button or rotate the select/reset knob
INST.MPG
0 20 40
73F
A
002300 123.4
CUSTOMIZE ENTRY
ENTER
CHG SETTING
1/3
DEFAULT ALL
2/3
EXIT
3/3
CUSTOMIZE GROUP
METER SETUP
1/4
LIGHTING SETUP
2/4
DOOR SETUP
3/4
EXIT
4/4
See page 88
See page 97
See page 102

CONTINUED

Meter Setup
Here are the four custom settings for the meter setup:

- LANGUAGE SELECTION
- ADJUST OUTSIDE TEMP. DISPLAY
- TRIP A & AVG. FUEL RESET with REFUEL
- ELAP. TIME RESET CONDITION

While “METER SETUP” is shown in the “CUSTOMIZE GROUP” of the multi-information display, press the SEL/RESET button.

Each time you press the INFO (▲/▼) button, the screen changes as shown in the illustration. Press the INFO (▲/▼) button until you see the setting you want to customize, then press the SEL/RESET button to enter your selection.

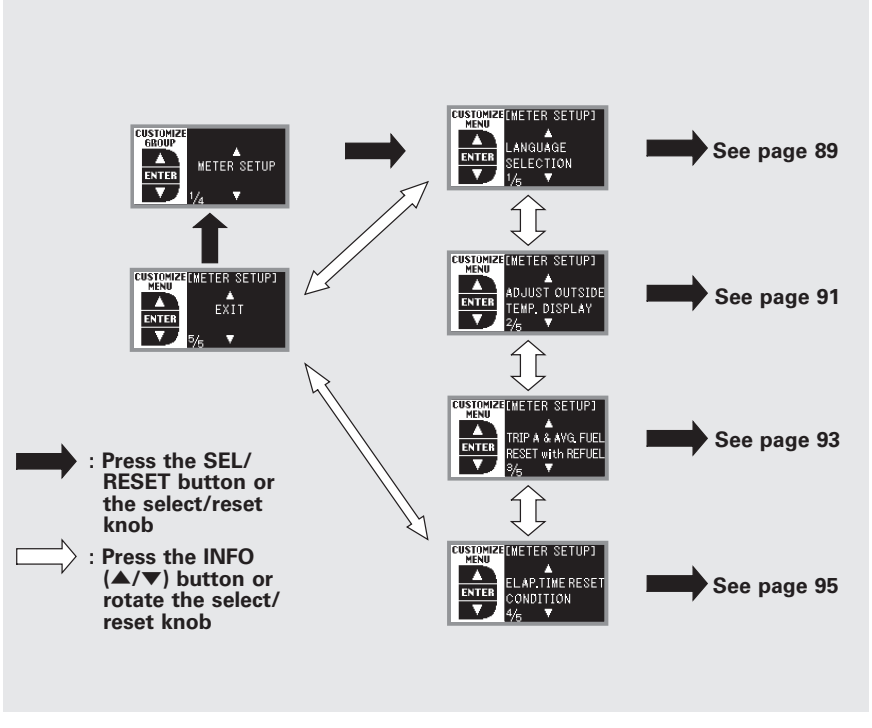

See page 89
See page 91
See page 93
See page 95

Language Selection

There are three language selections you can make: English, French, and Spanish. To choose the language you want, follow these instructions:



While "METER SETUP" is shown in the "CUSTOMIZE GROUP" of the multi-information display, press the SEL/RESET button. You will see the above display.

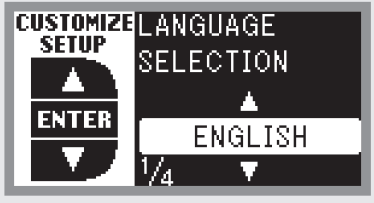

Select the desired language by pressing the INFO (▲/▼) button, then enter your selection by pressing the SEL/RESET button.

CONTINUED



When your choice is set, you will see the above display for several seconds, then the screen goes back to “CUSTOMIZE MENU.”

All messages on the multi-information display will be shown in the language you selected.

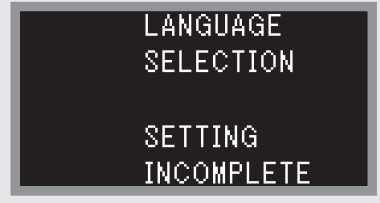

If your choice is not set, you will see the above display for several seconds, then the screen goes back to “CUSTOMIZE MENU.” If this happens, you need to repeat the same procedure.



To exit “LANGUAGE SELECTION” without changing the current setting, select “EXIT” by pressing the INFO (▲/▼) button, then press the SEL/RESET button. The screen goes back to “CUSTOMIZE MENU.”

Adjust Outside Temp. Display
If you sometimes find that the temperature reading is a few degrees above or below the actual temperature, you can adjust it by following these instructions:

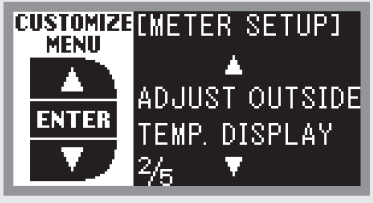

While "METER SETUP" is shown in the "CUSTOMIZE GROUP" of the multi-information display, press the SEL/RESET button. The screen changes to "CUSTOMIZE MENU." Press the INFO (▲/▼) button until you see the above display.

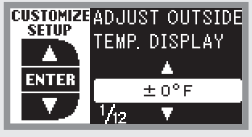

U.S.

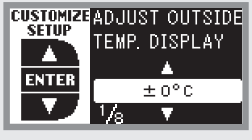

Canada

Press the SEL/RESET button. The screen changes as shown above. The highlighted number is the current setting above or below the outside temperature. Press the INFO (▲/▼) button repeatedly until the number you want appears, then press the SEL/RESET button to enter your selection.

CONTINUED

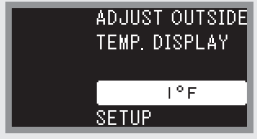

U.S.

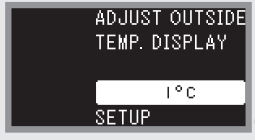

Canada

When your choice is set, you will see the above display for several seconds, then the screen goes back to “CUSTOMIZE MENU.”



If your choice is not set, you will see the above display for several seconds, then the screen goes back to “CUSTOMIZE MENU.” If this happens, you need to repeat the same procedure.



To exit “ADJUST OUTSIDE TEMP. DISPLAY” without changing the current setting, select “EXIT” by pressing the INFO (▲/▼) button, then press the SEL/RESET button. The screen goes back to “CUSTOMIZE MENU.”

Trip A & Avg. Fuel Reset with Refuel
To cause Trip A and AVG. FUEL A to reset every time you refuel your vehicle, follow these instructions:

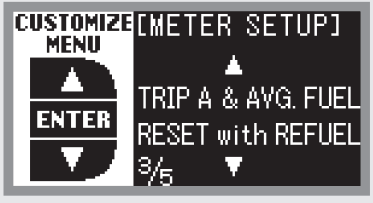

While “METER SETUP” is shown in the “CUSTOMIZE GROUP” of the multi-information display, press the SEL/RESET button. The screen changes to “CUSTOMIZE MENU.” Press the INFO (▲/▼) button until you see the above display.

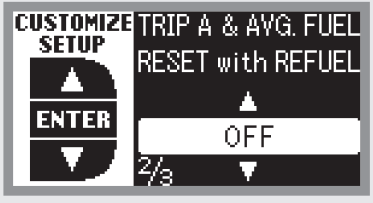

Press the SEL/RESET button. The screen changes as shown above. Select “ON” or “OFF” by pressing the INFO (▲/▼) button, then press the SEL/RESET button to enter your selection.

CONTINUED

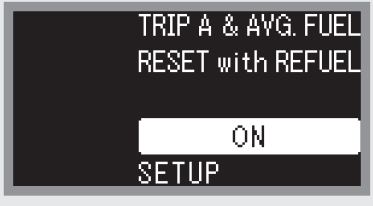

When your choice is set, you will see the above display for several seconds, then the screen goes back to “CUSTOMIZE MENU.”



If your choice is not set, you will see the above display for several seconds, then the screen goes back to “CUSTOMIZE MENU.” If this happens, you need to repeat the same procedure.



To exit “TRIP A & AVG. FUEL RESET with REFUEL” without changing the current setting, select “EXIT” by pressing the INFO (▲/▼) button, then press the SEL/RESET button. The screen goes back to “CUSTOMIZE MENU.”

Elap. Time Reset Condition
There are three elapsed time reset choices you can make:

IGN RESET – The elapsed time is reset when you turn the ignition switch to the LOCK (0) position.

TRIP A – The elapsed time is reset when Trip A is reset.

TRIP B – The elapsed time is reset when Trip B is reset.

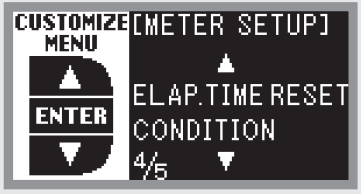

While "METER SETUP" is shown in the "CUSTOMIZE GROUP" of the multi-information display, press the SEL/RESET button. The screen changes to "CUSTOMIZE MENU." Press the INFO (▲/▼) button until you see the above display.

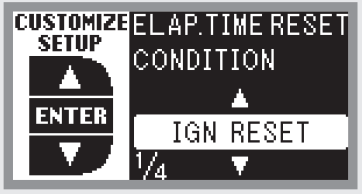

Press the SEL/RESET button. The screen changes as shown above. Select the desired setting by pressing the INFO (▲/▼) button, then press the SEL/RESET button to enter your selection.

CONTINUED



When your choice is set, you will see the above display for several seconds, then the screen goes back to “CUSTOMIZE MENU.”

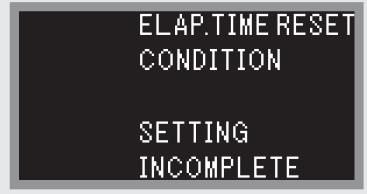

If your choice is not set, you will see the above display for several seconds, then the screen goes back to “CUSTOMIZE MENU.” If this happens, you need to repeat the same procedure.

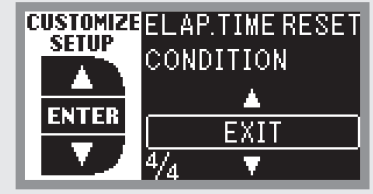

To exit “ELAP. TIME RESET CONDITION” without changing the current setting, select “EXIT” by pressing the INFO (▲/▼) button, then press the SEL/RESET button. The display goes back to “CUSTOMIZE MENU.”

Lighting Setup
There are two settings in the lighting setup:

- INTERIOR LIGHT DIMMING TIME
- HEADLIGHT AUTO OFF TIMER

While "CUSTOMIZE GROUP" is shown on the multi-information display, select "LIGHTING SETUP" by pressing the INFO (▲/▼) button, then press the SEL/RESET button.

Each time you press the INFO (▲/▼) button, the screen changes as shown in the illustration. Press the INFO (▲/▼) button until you see the setting you want to customize, then press the SEL/RESET button to enter your selection.

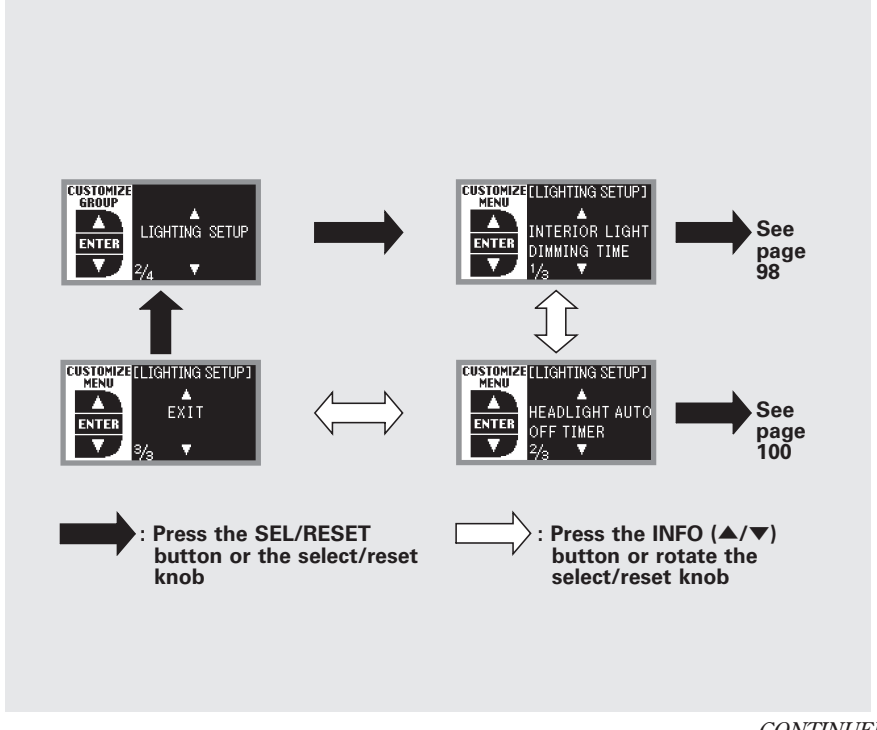

CONTINUED

Interior Light Dimming Time
The interior lights fade out when you close all doors. You can change the time that the interior lights fade out.

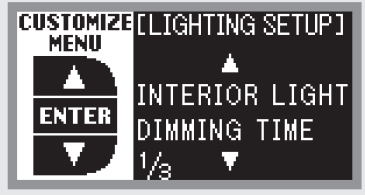

While “LIGHTING SETUP” is shown in the “CUSTOMIZE GROUP” of the multi-information display, press the SEL/RESET button. You will see the above display.

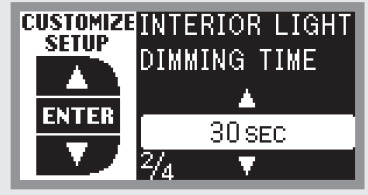

Press the SEL/RESET button. The screen changes as shown above. Select how long you want the lights to stay on before they fade out (15, 30, or 60 seconds) by pressing the INFO (▲/▼) button, then press the SEL/RESET button to enter your selection.



When your choice is set, you will see the above display for several seconds, then the screen goes back to “CUSTOMIZE MENU.”



If your choice is not set, you will see the above display for several seconds, then the screen goes back to “CUSTOMIZE MENU.” If this happens, you need to repeat the same procedure.

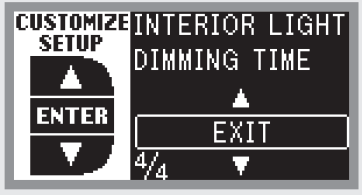

To exit “INTERIOR LIGHT DIMMING TIME” without changing the current setting, select “EXIT” by pressing the INFO (▲/▼) button, then press the SEL/RESET button. The screen goes back to “CUSTOMIZE MENU.”

CONTINUED

Headlight Auto Off Timer
The headlights, parking lights, side marker lights, taillights, and license plate lights go off after the selected time when you close the driver's door and take the remote with you. To change how long the lights stay on before they go off, follow these instructions:



While “LIGHTING SETUP” is shown in the “CUSTOMIZE GROUP” of the multi-information display, press the SEL/RESET button. The screen changes to “CUSTOMIZE MENU.” Press the INFO (▲/▼) button until you see the above display.

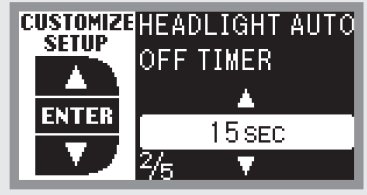

Press the SEL/RESET button. The screen changes as shown above. Select how long you want the lights to stay on before they go off (0, 15, 30, or 60 seconds) by pressing the INFO (▲/▼) button, then press the SEL/RESET button to enter your selection.



When your choice is set, you will see the above display for several seconds, then the screen goes back to “CUSTOMIZE MENU.”



If your choice is not set, you will see the above display for several seconds, then the screen goes back to “CUSTOMIZE MENU.” If this happens, you need to repeat the same procedure.

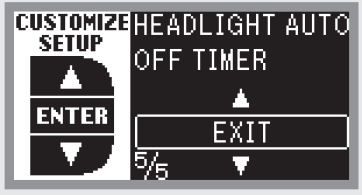

To exit “HEADLIGHT AUTO OFF TIMER” without changing the current setting, select “EXIT” by pressing the INFO (▲/▼) button, then press the SEL/RESET button. The screen goes back to “CUSTOMIZE MENU.”

CONTINUED

Door Setup
Here are the five custom settings for the door setup:

- AUTO DOOR LOCK
- DOOR LOCK MODE
- KEYLESS LOCK ACKNOWLEDGEMENT
- SECURITY RELOCK TIMER
- AUTO DOOR UNLOCK

While "CUSTOMIZE GROUP" is shown on the multi-information display, select "DOOR SETUP" by pressing INFO (▲/▼) button, then press the SEL/RESET button.

Each time you press the INFO (▲/▼) button, the screen changes as shown in the illustration. Press the INFO (▲/▼) button until you see the setting you want to customize, then press the SEL/RESET button to enter your selection.

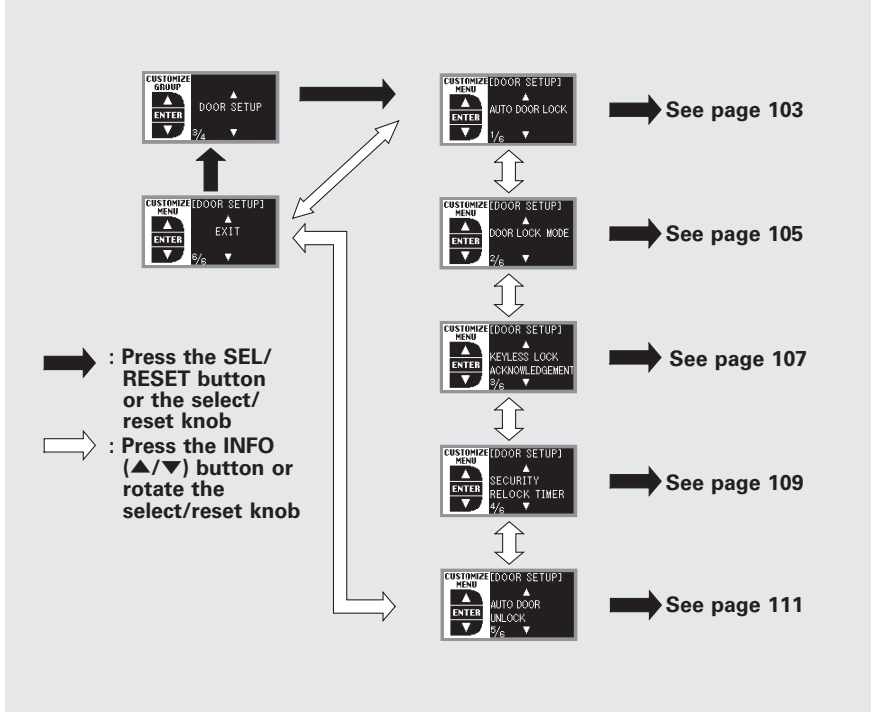

Auto Door Lock
There are three settings you can choose from:

OFF –
The auto door lock is deactivated all the time.

WITH VEH SPD –
The doors lock when the vehicle speed reaches about 9 mph (about 15 km/h).

SHIFT FROM P –
The doors lock whenever you move the shift lever out of Park.



While "DOOR SETUP" is shown in the "CUSTOMIZE GROUP" of the multi-information display, press the SEL/RESET button. You will see the above display.



Press the SEL/RESET button. The screen changes as shown above. Select the desired setting by pressing the INFO (▲/▼) button, then press the SEL/RESET button to enter your selection.

CONTINUED



When your choice is set, you will see the above display for several seconds, then the screen goes back to “CUSTOMIZE MENU.”



If your choice is not set, you will see the above display for several seconds, then the screen goes back to “CUSTOMIZE MENU.” If this happens, you need to repeat the same procedure.



To exit “AUTO DOOR LOCK” without changing the current setting, select “EXIT” by pressing the INFO (▲/▼) button, then press the SEL/RESET button. The screen goes back to “CUSTOMIZE MENU.”

Door Lock Mode
To select whether the driver's or all doors unlock when the remote transmitter or key is used, follow these instructions.



While “DOOR SETUP” is shown in the “CUSTOMIZE GROUP” of the multi-information display, press the SEL/RESET button. The screen changes to “CUSTOMIZE MENU.” Press the INFO (▲/▼) button until you see the above display.

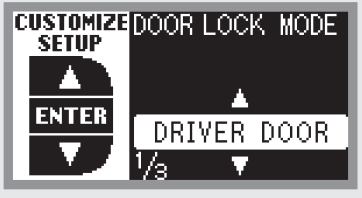

Press the SEL/RESET button. The screen changes as shown above. Select “DRIVER DOOR” or “ALL DOORS” by pressing the INFO (▲/▼) button, then press the SEL/RESET button to enter your selection.

CONTINUED



When your choice is set, you will see the above display for several seconds, then the screen goes back to “CUSTOMIZE MENU.”



If your choice is not set, you will see the above display for several seconds, then the screen goes back to “CUSTOMIZE MENU.” If this happens, you need to repeat the same procedure.



To exit “DOOR LOCK MODE” without changing the current setting, select “EXIT” by pressing the INFO (▲/▼) button, and then press the SEL/RESET button. The screen goes back to “CUSTOMIZE MENU.”

Keyless Lock Acknowledgement
When you press the UNLOCK button on the remote transmitter to unlock the doors and the tailgate, the exterior lights blink twice to verify that the doors and the tailgate are unlocked and the security system is turned off.

When you push the LOCK button on the remote transmitter, some exterior lights flash, and a beeper sounds when you push the LOCK button again within 5 seconds to verify that the doors and the tailgate are locked and the security system has set (see page 294). You can customize the exterior lights not to flash and the beeper not to sound.



While "DOOR SETUP" is shown in the "CUSTOMIZE GROUP" of the multi-information display, press the SEL/RESET button. The screen changes to "CUSTOMIZE MENU." Press the INFO (▲/▼) button until you see the above display.

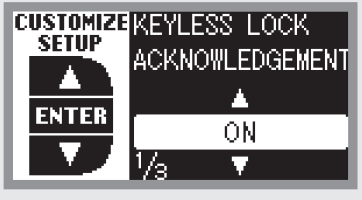

Press the SEL/RESET button. The screen changes as shown above. Select "ON" or "OFF" by pressing the INFO (▲/▼) button, then press the SEL/RESET button to enter your selection.

CONTINUED



When your choice is set, you will see the above display for several seconds, then the screen goes back to “CUSTOMIZE MENU.”



If your choice is not set, you will see the above display for several seconds, then the screen goes back to “CUSTOMIZE MENU.” If this happens, you need to repeat the same procedure.



To exit “KEYLESS LOCK ACKNOWLEDGEMENT” without changing the current setting, select “EXIT” by pressing the INFO (▲/▼) button, then press the SEL/RESET button. The screen goes back to “CUSTOMIZE MENU.”

Security Relock Timer

If you unlock the doors and the tailgate with the remote transmitter, but do not open any of the doors or the tailgate within 30 seconds, the doors and the tailgate automatically relock and the security system sets.

You can change this relock time from 30 seconds to 60 or 90 seconds.



While "DOOR SETUP" is shown in the "CUSTOMIZE GROUP" of the multi-information display, press the SEL/RESET button. The screen changes to "CUSTOMIZE MENU." Press the INFO (▲/▼) button until you see the above display.

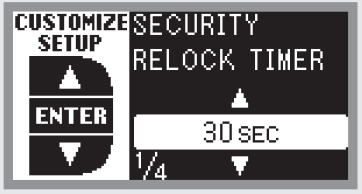

Press the SEL/RESET button. The screen changes as shown above. Select the relock time you want (30, 60, or 90 seconds) by pressing the INFO (▲/▼) button, then press the SEL/RESET button to enter your selection.

CONTINUED



When your choice is set, you will see the above display for several seconds, then the screen goes back to “CUSTOMIZE MENU.”



If your choice is not set, you will see the above display for several seconds, then the screen goes back to “CUSTOMIZE MENU.” If this happens, you need to repeat the same procedure.



To exit “SECURITY RELOCK TIMER” without changing the current setting, select “EXIT” by pressing the INFO (▲/▼) button, then press the SEL/RESET button. The screen goes back to “CUSTOMIZE MENU.”

Auto Door Unlock
There are three settings you can choose from:

SHIFT TO P − The driver's door or all the doors unlock when you move the shift lever to Park with the brake pedal depressed.

IGN OFF − The driver's door or all the doors unlock when you turn the ignition switch to the LOCK (0) position.

OFF − The auto door unlock mode is deactivated all the time.

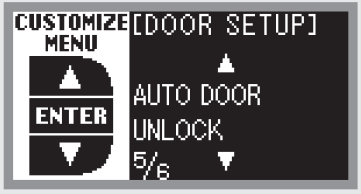

While “DOOR SETUP” is shown in the “CUSTOMIZE GROUP” of the multi-information display, press the SEL/RESET button. The screen changes to “CUSTOMIZE MENU.” Press the INFO (▲/▼) button until you see the above display.



Press the SEL/RESET button. The screen changes as shown above. Select the desired setting by pressing the INFO (▲/▼) button, then press the SEL/RESET button to enter your selection.

CONTINUED



When your choice is set, you will see the above display for several seconds, then the screen goes back to “CUSTOMIZE MENU.”



If your choice is not set, you will see the above display for several seconds, then the screen goes back to “CUSTOMIZE MENU.” If this happens, you need to repeat the same procedure.



To exit “AUTO DOOR UNLOCK” without changing the current setting, select “EXIT” by pressing the INFO (▲/▼) button, then press the SEL/RESET button. The screen goes back to “CUSTOMIZE MENU.”

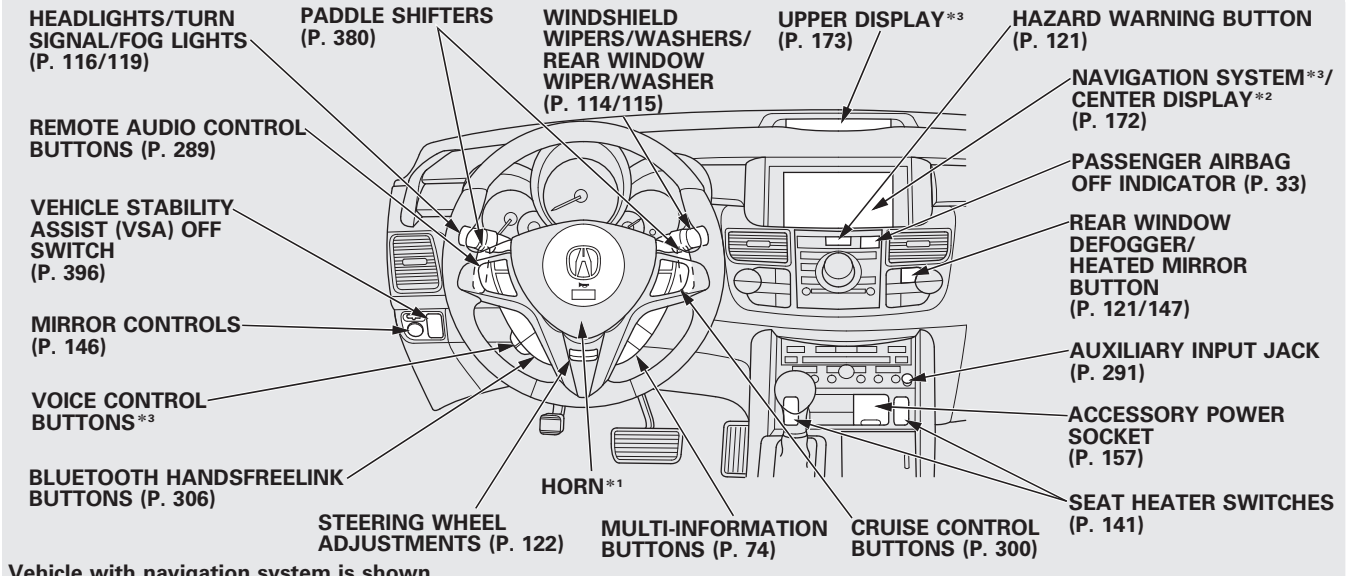

Vehicle with navigation system is shown.

*1: To use the horn, press the center pad of the steering wheel.
*2: On models without navigation system.
*3: Only on vehicles equipped with navigation system. Refer to the navigation system manual.

Windshield Wiper

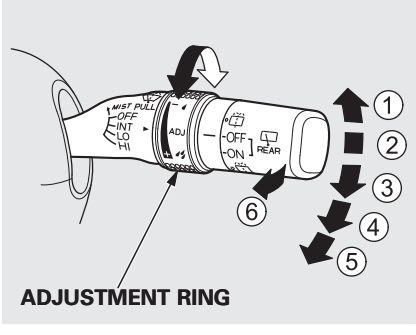

1. MIST
2. OFF
3. INT − Intermittent
4. LO − Low speed
5. HI − High speed
6. Windshield washers

Push the right lever up or down to select a position.

MIST − The wipers run at high speed until you release the lever.

OFF − The wipers are not activated.

INT − The length of the wiper interval is varied automatically according to the vehicle's speed.

Vary the delay by turning the adjustment ring. If you turn it to the shortest delay (position), the wipers change to low speed operation when the vehicle speed exceeds 12 mph (20 km/h).

While the vehicle is stopped and in gear, the wipers sweep the windshield whenever you remove your foot from the brake pedal.

LO − The wipers run at low speed.

HI − The wipers run at high speed.

Windshield Washers − Pull the wiper control lever toward you, and hold it. The washers spray until you release the lever. The wipers run at low speed, then complete one more sweep after you release the lever.

Rear Window Wiper and Washer

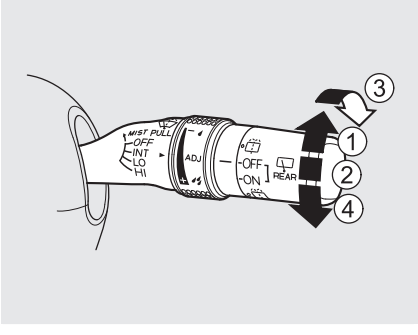

1. ON
2. OFF
3. Rear Window Washer with Wiper
4. Rear Window Washer Only.

ON − Rotate the switch clockwise to turn the rear window wiper ON. The wiper operates intermittently.

OFF − The wiper is not activated. When you turn the wiper switch to OFF while the rear window wiper is in action, it will return to its parked position.

When you shift the transmission to the reverse position with the front windshield wipers activated, the rear window wiper operates automatically. When the wiper control lever position is INT, the rear wiper operates intermittently. When it is LO or HI, the rear wiper operates continuously.

Rear Window Washer with Wiper − Hold past ON to turn the rear window wiper on and to spray the rear window washer. The rear window wiper makes one more sweep after you release the switch.

Rear Window Washer Only − Rotate the switch counterclockwise from OFF to spray the window washer without activating the wiper. The washer will operate until you release the switch.

The rear window washer uses the same fluid reservoir as the windshield washer.

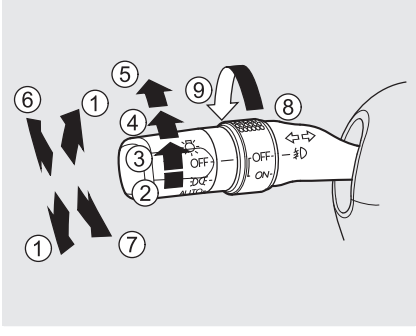

1. Turn signal
2. Off
3. Parking and interior lights
4. AUTO
5. Headlights on
6. High beams
7. Flash high beams
8. Fog lights off
9. Fog lights on

Turn Signal – Push down on the lever to signal a left turn and up to signal a right turn. To signal a lane change, push lightly on the lever, and hold it. The lever will return to center when you release it or complete a turn.

Headlights – Turning the switch to the position turns on the parking lights, taillights, instrument panel lights, side-marker lights, and rear license plate lights.

Turning the switch to the position turns on the headlights.

When the light switch is in the or position, the lights on indicator comes on as a reminder. This indicator stays on if you leave the light switch on and turn the ignition switch to the ACCESSORY (I) or the LOCK (0) position.

If you leave the lights on with the key removed from the ignition switch, you will hear a reminder beeper when you open the driver's door.

High Beams – Push the lever forward and the high beam indicator will come on (see page 69). Pull it back to return to low beams.

To flash the high beams, pull the lever back lightly, then release it. The high beams will stay on as long as you hold the lever back.

AUTO – The automatic lighting feature turns on the headlights and all other exterior lights when it senses low ambient light.

To turn on automatic lighting, turn the light switch to AUTO. The lights will come on automatically when the outside light level becomes low (at dusk, for example). The lights on indicator comes on as a reminder. The lights and indicator will turn off automatically when the system senses high ambient light.

The lights will remain on when you turn off the ignition switch. They will turn off automatically when you remove the key and open the driver's door. To turn them on again, either turn the ignition switch to the ON (II) position or turn the light switch to the ≣D position.

CONTINUED

Even with the automatic lighting feature turned on, we recommend that you turn on the lights manually when driving at night or in a dense fog, or when you enter dark areas such as long tunnels or parking facilities.

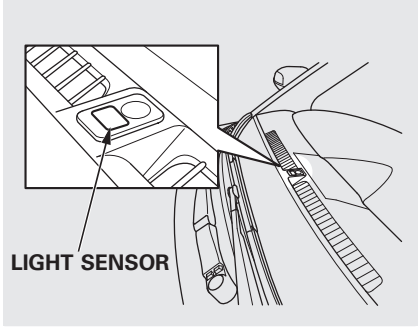

The automatic lighting feature is controlled by a sensor located on top of the dashboard. Do not cover this sensor or spill liquids on it.

Automatic Lighting Off Feature

This feature turns off the headlights, fog lights, parking lights, taillights, side marker lights, license plate lights, and instrument panel lights within 15 seconds of removing the key from the ignition switch and closing the driver's door.

This feature activates if you leave the headlight switch in the ≥◯◯≤ or ≣◯ position, remove the key, then open and close the driver's door.

If you remove the key from the ignition switch with the headlight switch on, but do not open the door, the lights will turn off after 10 minutes.

The lights will turn on again when you unlock or open the driver's door. If you unlock the door, but do not open it within 15 seconds, the lights will go off. With the driver's door open, you will hear a lights on reminder beeper.

You can change the “HEADLIGHT AUTO OFF TIMER” setting on the multi-information display (see page 100).

Daytime Running Lights

With the headlight switch off or in the ⇶ position, the high beam headlights and the high beam indicator come on with reduced brightness when you turn the ignition switch to the ON (II) position and release the parking brake. They remain on until you turn the ignition switch off, even if you set the parking brake.

The headlights revert to normal operation when you turn them on with the switch.

If you see a “CHECK DRL SYSTEM” message on the multi-information display, there is a problem with the daytime running light system. Take your vehicle to a dealer to have it checked.

Fog Lights

Turn the fog lights on and off by turning the switch next to the headlight switch.

You can use the fog lights only when the headlights are on low beam. They will go off when the headlights are turned off.

Instrument Panel Brightness

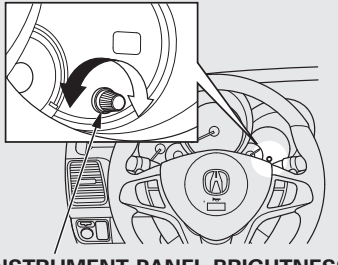

INSTRUMENT PANEL BRIGHTNESS CONTROL KNOB

The knob on the instrument panel controls the brightness of the instrument panel lights. Turn the knob to adjust the brightness. Separate adjustments can be made when the headlights are on and off.

You will hear a beep when maximum or minimum brightness is reached. You will also hear a beep when the maximum level is canceled by turning the knob a click to the left.

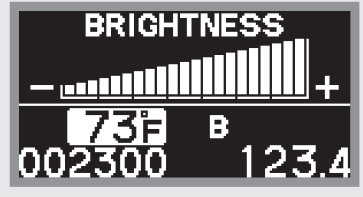

U.S. model is shown

To reduce glare at night, the instrument panel illumination dims when you turn the light switch to the ≣D or ≣D position.

The level of brightness is shown on the multi-information display while you adjust it. It goes out 5 seconds after you finish adjusting.

Rear Window Defogger

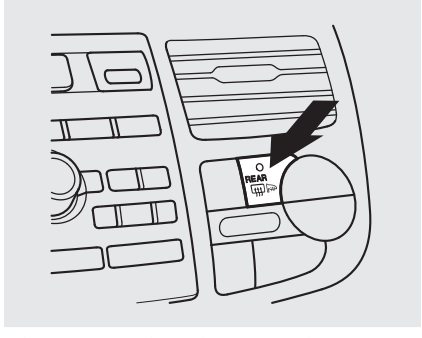

The rear window defogger clears fog, frost, and thin ice from the window. Push the defogger button to turn it on and off. The indicator in the button comes on to show the defogger is on. If you do not turn it off, the defogger will shut itself off within about 5 to 30 minutes according to the outside temperature. It also shuts off when you turn off the ignition switch. You have to turn it on again when you restart the vehicle.

In cold weather, the defogger will not automatically shut itself off. You must manually shut off the rear window defogger when it is no longer needed.

Make sure the rear window is clear and you have good visibility before starting to drive.

The defogger wires on the inside of the rear window can be accidentally damaged. When cleaning the glass, always wipe side-to-side.

Pushing this button also turns the mirror heaters on or off. For more information, see page 147.

Hazard Warning Button

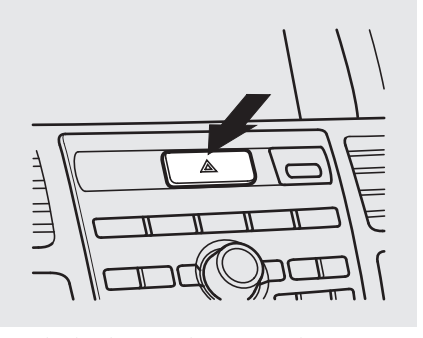

Push the button between the center vents to turn on the hazard warning lights (four-way flashers). This causes all outside turn signals and both indicators in the instrument panel to flash. Use the hazard warning lights if you need to park in a dangerous area near heavy traffic, or if your vehicle is disabled.

Steering Wheel Adjustments

Make any steering wheel adjustments before you start driving.

⚠WARNING

Adjusting the steering wheel position while driving may cause you to lose control of the vehicle and be seriously injured in a crash.

Adjust the steering wheel only when the vehicle is stopped.

1. Push the lever under the steering column all the way down.
2. Move the steering wheel up or down, and in or out, so it points toward your chest, not toward your face. Make sure you can see the instrument panel gauges and indicators.

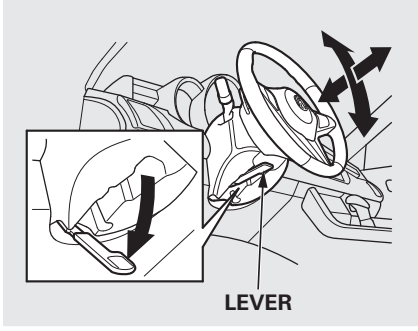

3. Push the lever up to lock the steering wheel in position.
4. Make sure you have securely locked the steering wheel in place by trying to move it up, down, in, and out.

Keys and Locks

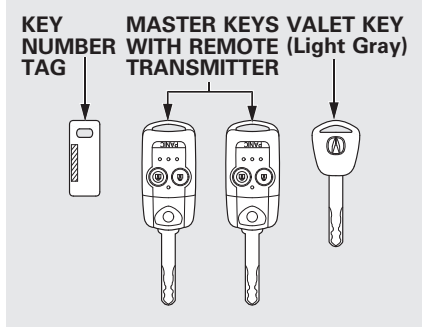

The master key fits all the locks on your vehicle. The valet key works only in the ignition and the door locks. You can keep the glove box and console compartment locked when you leave your vehicle and the valet key at a parking facility.

You should have received a key number tag with your keys. You will need this key number if you ever have to get a lost key replaced. Use only Acura-approved key blanks.

These keys contain electronic circuits that are activated by the immobilizer system. They will not work to start the engine if the circuits are damaged.

- Protect the keys from direct sunlight, high temperature, and high humidity.
- Do not drop the keys or set heavy objects on them.
- Keep the keys away from liquids. If they get wet, dry them immediately with a soft cloth.

The valet key does not contain a battery. Do not try to take it apart.

Retractable Master Key

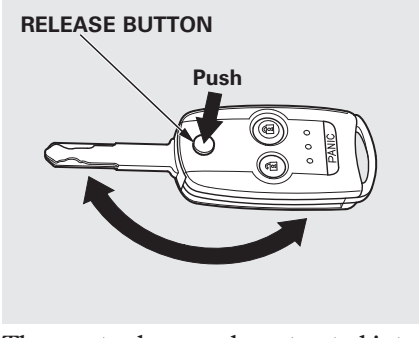

The master key can be retracted into the remote transmitter. To use the key, push the release button to release the key from the transmitter. The key should be fully extended. To retract the key, push the release button and at the same time push the key into the remote transmitter until it is securely latched.

Always use the fully-extended key when you insert it to the ignition switch. If the key does not fully extend, the immobilizer system may not operate properly and may prevent the engine from starting.

The key may come in contact with your finger while being retracted or extended. Make sure your fingers do not touch the pivot of the key when retracting or extending the key.

Immobilizer System

The immobilizer system protects your vehicle from theft. If an improperly coded key (or other device) is used, the engine's fuel system is disabled.

When you turn the ignition switch to the ON (II) position, the immobilizer system indicator should come on briefly, then go off. If the indicator starts to blink, it means the system does not recognize the coding of the key. Turn the ignition switch to the LOCK (0) position, remove the key, reinsert it, and turn the ignition switch to the ON (II) position again.

The system may not recognize your key's coding if another immobilizer key or other metal object (i.e. key chain) is near the ignition switch when you insert the key.

If the system repeatedly does not recognize the coding of your key, contact your dealer.

Do not attempt to alter this system or add other devices to it. Electrical problems could result that may make your vehicle inoperable.

If you have lost your key and cannot start the engine, contact your dealer.

NOTICE

Always take the ignition key with you whenever you leave the vehicle alone.

As required by the FCC:
This device complies with Part 15 of the FCC rules. Operation is subject to the following two conditions: (1) This device may not cause harmful interference, and (2) this device must accept any interference received, including interference that may cause undesired operation.

Changes or modifications not expressly approved by the party responsible for compliance could void the user's authority to operate the equipment.

This device complies with Industry Canada Standard RSS-210.
Operation is subject to the following two conditions: (1) this device may not cause interference, and (2) this device must accept any interference that may cause undesired operation of the device.

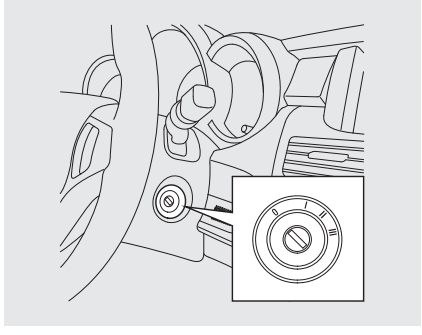

The ignition switch has four positions: LOCK (0), ACCESSORY (I), ON (II), and START (III).

LOCK (0) – You can insert or remove the key only in this position. To turn the key, the shift lever must be in Park, and you must push the key in slightly.

If the front wheels are turned, the anti-theft lock may make it difficult to turn the key. Firmly turn the steering wheel to the left or right as you turn the key.

ACCESSORY (I) – You can operate the audio system and the accessory power sockets in this position.

ON (II) – This is the normal key position when driving. Several of the indicators on the instrument panel come on as a test when you turn the ignition switch from the ACCESSORY (I) to the ON (II) position.

START (III) – Use this position only to start the engine. The switch returns to the ON (II) position when you let go of the key.

You will hear a reminder beeper if you leave the key in the ignition switch in the LOCK (0) or the ACCESSORY (I) position and open the driver's door. Remove the key to turn off the beeper.

You will also see a “REMOVE KEY” message on the multi-information display (see page 80).

The shift lever must be in Park before you can remove the key from the ignition switch.

Power Door Locks

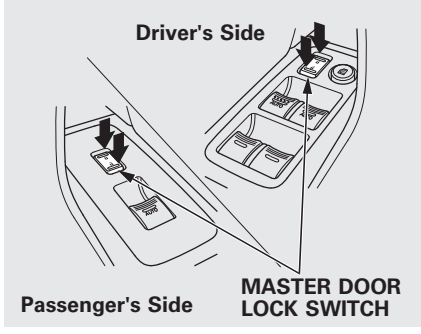

Each front door has a master door lock switch. Either switch locks and unlocks all doors and the tailgate. Push the top of the switch to lock all doors and the tailgate; push the bottom to unlock them.

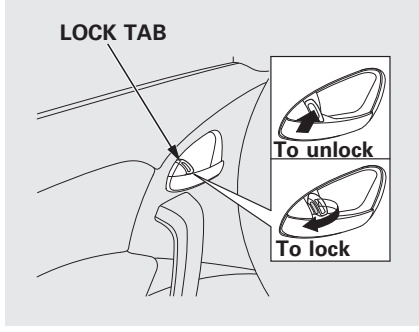

Each door has a lock tab next to the inside door handle. When you pull backward on the lock tab on the driver's door, all the doors and the tailgate lock. Pushing forward on the lock tab on the driver's door unlocks only that door. The lock tab on each passenger's door locks and unlocks only that door.

When the door is unlocked, you can see the red indicator on the lock tab next to the inside door handle.

All doors and the tailgate can be locked from the outside by using the key in the driver's door lock. To unlock only the driver's door, insert the key, turn the key, and release it. The remaining doors and the tailgate unlock when you turn the key a second time within a few seconds.

You can change the “DOOR LOCK MODE” setting on the multi-information display (see page 105).

When the vehicle speed reaches about 9 mph (about 15 km/h) or more, all the doors lock automatically.

You can change the “AUTO DOOR LOCK” setting on the multi-information display (see page 103).

When you shift to P after driving, the driver's door unlocks.

You can change the “AUTO DOOR UNLOCK” setting on the multi-information display (see page 111).

To lock any passenger's door when getting out of the vehicle, pull backward on the lock tab and close the door. To lock the driver's door, remove the key from the ignition switch and pull backward on the lock tab. Then close the door.

Lockout Prevention

With the driver's door open and the key in the ignition, both master door lock switches are disabled. They are not disabled if the driver's door is closed. Pushing the switch down on the open front passenger's door will lock all doors and the tailgate.

Childproof Door Locks

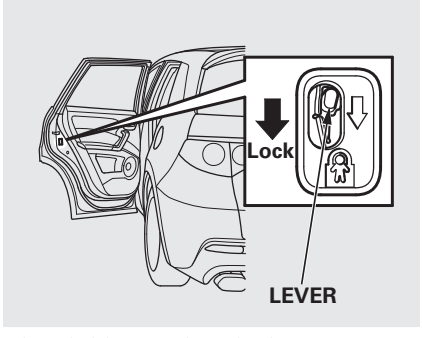

The childproof door locks are designed to prevent children seated in the rear from accidentally opening the rear doors. Each rear door has a lock lever near the edge. With the lever in the LOCK position (lever is down), the door cannot be opened from the inside regardless of the position of the lock tab. To open the door, push the lock tab forward and use the outside door handle.

The tailgate will lock when you lock the driver's door, and will unlock when you unlock all doors.

You can change the “DOOR LOCK MODE” setting on the multi-information display (see page 105).

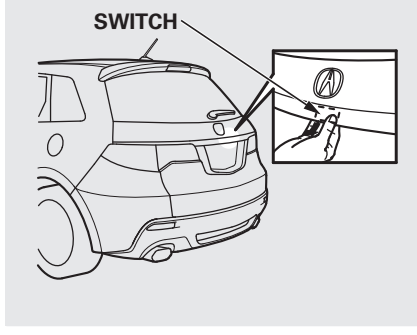

To open the tailgate, press and hold the switch, then lift up.

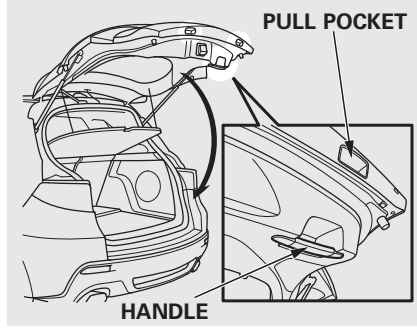

To close the tailgate, use the tailgate handle or the pull pockets to lower the tailgate, then press down on the back edge.

Keep the tailgate closed at all times while driving to avoid damaging the tailgate and to prevent exhaust gas from getting into the interior. See **Carbon Monoxide Hazard** on page 57.

Unlocking the Tailgate

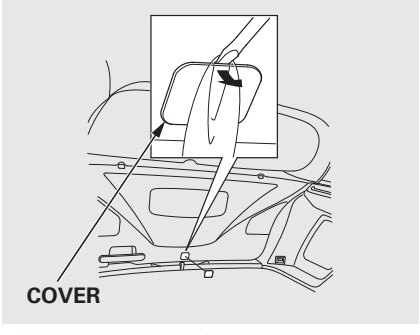

If the power door lock system cannot unlock the tailgate, unlock it manually.

Place a cloth on the top side of the cover to prevent scratches, then use a small flat-tip screwdriver to remove the cover on the back of the tailgate.



Push the release lever to the lower right as shown with the screw driver, then push and open the tailgate.

If you need to unlock the tailgate manually, it means there is a problem with the tailgate. Have the vehicle checked by your dealer.

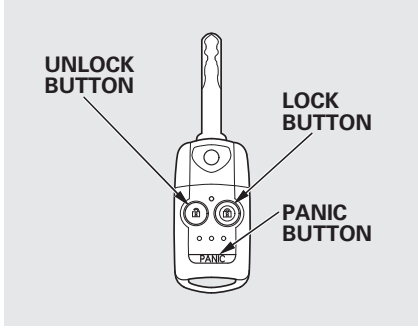

LOCK – Press this button once to lock all doors and the tailgate. Some exterior lights will flash. When you push LOCK twice within 5 seconds, you will hear a beep to verify that the doors and tailgate are locked and the security system has set. This button does not work if any door or tailgate is not fully closed.

To change the “KEYLESS LOCK ACKNOWLEDGEMENT” setting, see page 107.

UNLOCK – Press this button once to unlock the driver's door. Push it twice to unlock the other doors. Some exterior lights will flash twice when you push the button. If you do not open any door or the tailgate within 30 seconds, they will automatically relock.

To change the “DOOR LOCK MODE” setting, see page 105.

To change the “SECURITY RELOCK TIMER” setting, see page 109.

When you press the UNLOCK button, the ceiling lights (if the front and rear ceiling light switches are in the door activated position) will come on. If you do not open any door, the lights stay on for about 30 seconds, then fade out. If you relock the doors with the remote transmitter before 30 seconds have elapsed, the lights go off immediately.

To change the “INTERIOR LIGHT DIMMING TIME” setting, see page 98.

PANIC – Press this button for about 1 second to attract attention; the horn will sound, and the exterior lights will flash for about 30 seconds. To cancel panic mode, press any button on the remote transmitter, or turn the ignition switch to the ON (II) position.

Remote Transmitter Care

- Avoid dropping or throwing the transmitter.
- Protect the transmitter from extreme temperatures.
- Do not immerse the transmitter in any liquid.
- If you lose a transmitter, the replacement needs to be reprogrammed by your dealer.

Replacing the Transmitter Battery

If it takes several pushes on the button to lock or unlock the doors and the tailgate, replace the battery as soon as possible.
Battery type: CR1616

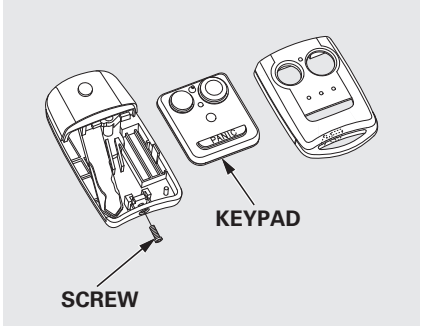

To replace the battery:

1. Remove the screw at the base of the transmitter with a small Phillips-head screwdriver.

   NOTE: Be careful when removing this screw as the head of the screw can strip out.

2. Separate the keypad from the transmitter by pushing any button from outside.

CONTINUED

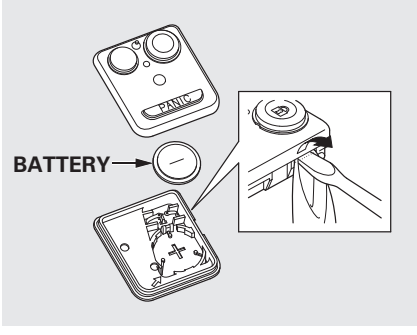

3. Place a cloth on the edge of the keypad to prevent scratches, and remove the upper half by carefully prying on the edge with a small flat-tip screwdriver.
4. Remove the old battery and note the polarity. Make sure the polarity of the new battery is the same (− side facing up), then insert it in the keypad.

   An improperly disposed of battery can hurt the environment. Always confirm local regulations for battery disposal.
5. Snap the two halves of the keypad, then install the parts in reverse order.

As required by the FCC:
This device complies with Part 15 of the FCC rules. Operation is subject to the following two conditions: (1) This device may not cause harmful interference, and (2) this device must accept any interference received, including interference that may cause undesired operation.

Changes or modifications not expressly approved by the party responsible for compliance could void the user's authority to operate the equipment.

This device complies with Industry Canada Standard RSS-210.
Operation is subject to the following two conditions: (1) this device may not cause interference, and (2) this device must accept any interference that may cause undesired operating of the device.

Recalling a Memorized Driving Position

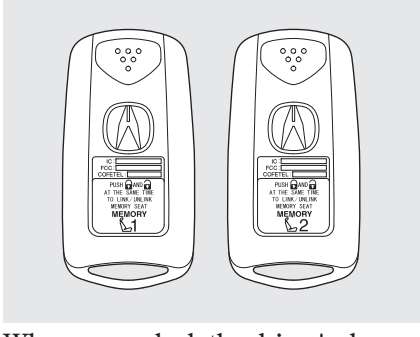

When you unlock the driver's door with your remote, each remote activates the keyless memory settings related to that remote. The driver's ID (MEMORY 1 or MEMORY 2) is shown on the back of each remote.

Here is the setting activated with the remote;

- Driving position memory (see page 148).

When you unlock and open the driver's door with the remote transmitter, the driver's seat (except the power lumbar feature) and outside mirrors start to move to the positions stored in memory. The indicator in the related memory button to the remote comes on.

To turn off this feature, press and hold the LOCK and UNLOCK buttons at the same time. Once the remote LED blinks twice, release the buttons. Keyless memory settings for that remote are canceled.

To turn the keyless memory settings back on, repeat this procedure. The LED blinks once to indicate the feature has been turned on.

Front Seat Power Adjustments

See pages 13 – 14 for important safety information and warnings about how to properly position the seats and seat-backs.

The controls for the power adjustable front seats are on the outside edge of each seat bottom. You can adjust the seats with the ignition switch in any position. Make all seat adjustments before you start driving.

The passenger seat has the same adjustments as the driver's seat but without any height and lumbar adjustments.

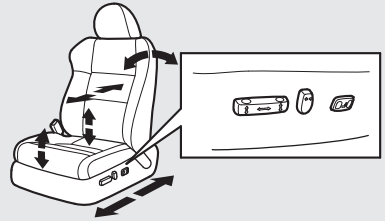

DRIVER'S SEAT

Moves the seat forward and backward.

Moves the front of the seat up or down. (Driver's seat only)

Raises or lowers the seat. (Driver's seat only)

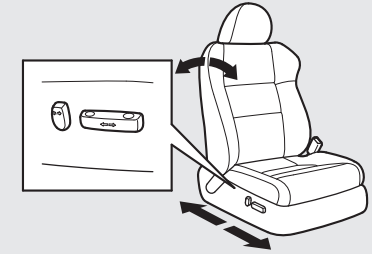

PASSENGER'S SEAT

Moves the whole seat up and forward, or down and backward. The front of the seat also tilts up or down at the same time. (Driver's seat only)

Adjusts the seat-back angle forward or backward.

Increases or decreases the lumbar support. (Driver's seat only)

Head Restraints

See page 15 for important safety information and a warning about improperly positioning head restraints.

Your vehicle is equipped with head restraints in all seating positions to help protect you and your passengers from the likelihood of whiplash and other injuries.

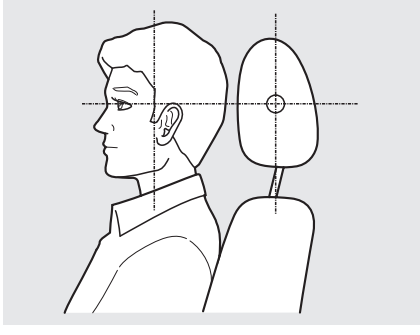

They are most effective when you adjust them so the center of the back of the occupant's head rests against the center of the restraint.

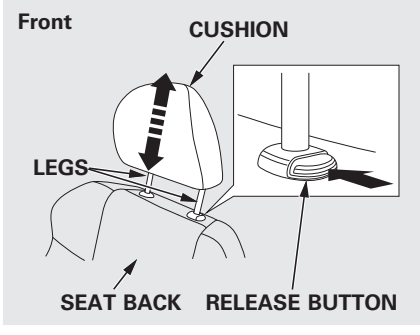

Adjusting the Head Restraint

The front and rear head restraints adjust for height. You need both hands to adjust the restraint. Do not attempt to adjust it while driving. To raise it, pull upward. To lower the restraint, push the release button and push the restraint down.

CONTINUED

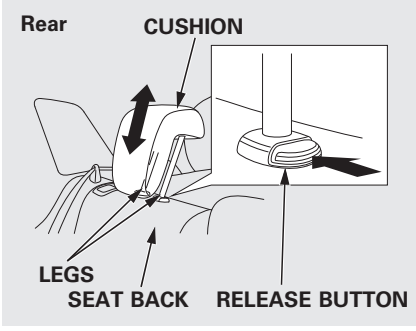

Removing the Head Restraint

To remove a head restraint for cleaning or repair, pull it up as far as it will go. Push the release button, then pull the restraint out of the seatback.

When reinstalling a head restraint, put the legs back in place. Then adjust it to the appropriate height while pressing the release button.

Make sure the removed head restraints are securely stored.

⚠WARNING

Failure to reinstall, or correctly reinstall, the head restraints can result in severe injury during a crash.

Always replace the head restraints before driving.

Active Head Restraints

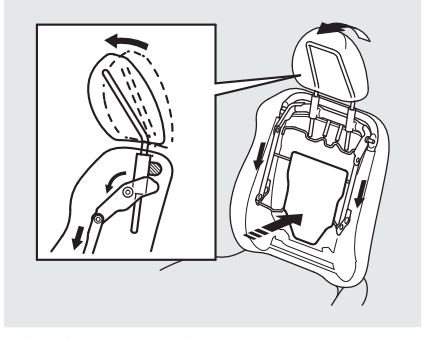

The driver's and front passenger's seats have active head restraints. If the vehicle is struck severely from the rear, the occupant properly secured with the seat belt will be pushed against the seat-back and the head restraint will automatically move forward.

This reduces the distance between the restraint and the occupant's head. It also helps protect the occupants against the likelihood of whiplash and injuries to the neck and upper spine.

After a collision, the activated restraint should return to its normal position.

If the restraints do not return to their normal position, or in the event of a severe collision, have the vehicle inspected by an Acura dealer.

For a head restraint system to work properly:

- Do not hang any items on the head restraints, or from the restraint legs.
- Do not place any object between an occupant and the seat-back.
- Install each restraint in its proper location.
- Only use genuine Acura replacement head restraints.

Armrests

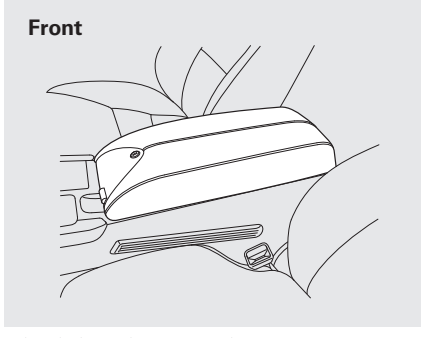

The lid of the console compartment can be used as an armrest.

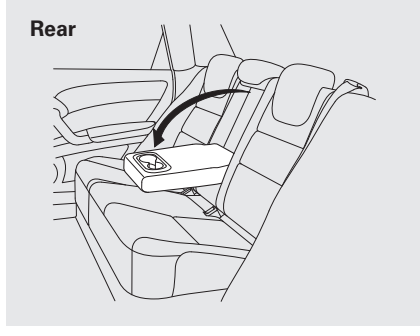

The rear seat armrest is in the center of the rear seat. Pivot it down to use it.

A beverage holder is located in the armrest.

Folding the Rear Seats Down

The rear seat-backs can be folded down to give more cargo room. Each side folds down separately. So you can still carry a passenger in the rear seat.

Remove any items from the seat before folding down the seat-back.

Make sure there are no items on the floor before folding down the seats.

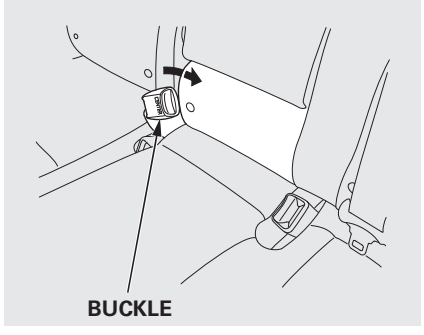

1. Move the front seats as far forward as possible. Make sure the front seat-backs are in the upright positions.
2. Store the center seat belt buckle into the pocket in the rear seat-back.
3. Lower the head restraints to their lowest positions.

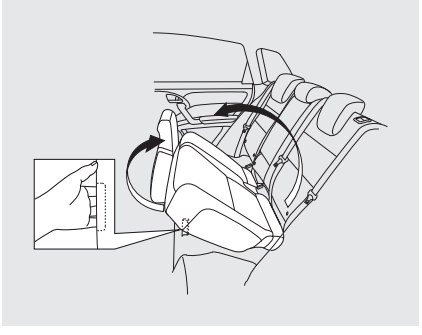

4. Push the armrest back in place.
5. Lift the front edge of the rear seat cushion, then pull up on the rear of the seat cushion, then fold the cushion forward.



6. Pull up the release lever on the outside of the seat-back. Fold the seat-back forward.
7. Move the front seats backward to the desired position.

CONTINUED

Do not put any heavy items on the seat-back when it is folded down.

Make sure all items in the cargo area are secured. Loose items can fly forward and cause injury if you have to brake hard (See **Carrying Cargo** on page 365).

Make sure that the folded down rear seat does not interfere with the front passenger's seat-back. This will cause the front passenger's weight sensors and the front passenger's seat belt reminder indicator to work improperly (see pages 21 and 33). Also check the passenger airbag off indicator to assure proper operation of the passenger's front airbag.

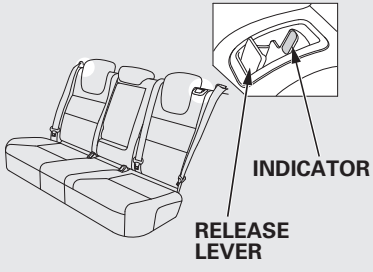

After returning the seat-back to the upright position, tug on the seat-back to make sure it is latched. If the seat-back is not latched fully, the seat belt will not work properly and you will see the red indicator behind the release lever as shown.

To return the seat cushion to its original position, lift up the seat cushion, then place the rear of the seat cushion at the base of the seat-back. Use the seat buckles as guides. Lower the front of the seat cushion until it locks into place.

Make sure the seat-back and seat cushion are locked securely and all rear shoulder belts are positioned in front of the rear seat-backs.

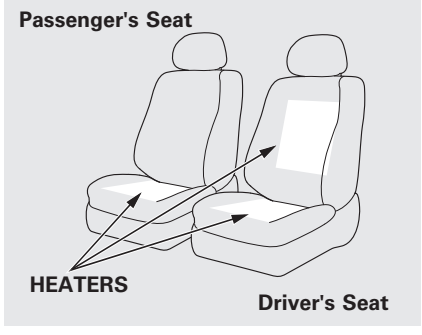

Both front seats are equipped with seat heaters. The passenger seat is only heated in the seat bottom because of the side airbag cutoff system.

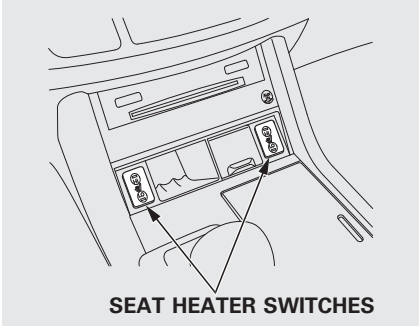

The ignition switch must be in the ON (II) position to use seat heaters. Push the top of the switch, HI, to rapidly heat up the seat. After the seat reaches a comfortable temperature, select LO by pushing the bottom of the switch. This will keep the seat warm.

⚠WARNING

Heat induced burns are possible when using seat heaters.

Persons with a diminished ability to sense temperature (e.g., persons with diabetes, lower-limb nerve damage, or paralysis) or with sensitive skin should not use seat heaters.

In the HI setting, the heater turns off when the seat gets warm, and turns back on after the seat's temperature drops.

In the LO setting, the heater runs continuously. It does not cycle with temperature changes.

CONTINUED

Follow these precautions whenever you use the seat heaters:

- Do not use the seat heater in the HI setting for an extended period, because it draws large amounts of current from the battery.
- If the engine is left idling for an extended period, do not use the seat heaters, even on the LO setting. It can weaken the battery, causing hard starting.

Power Windows

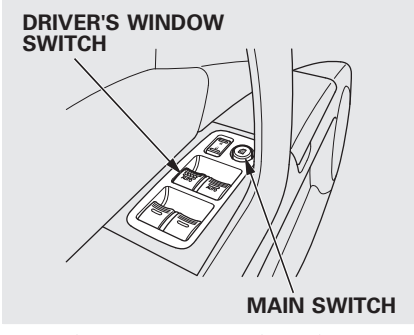

Turn the ignition switch to the ON (II) position to raise or lower any window. To open the window, push the switch down and hold it. Release the switch when you want to stop the window. To close the window, pull back on the switch and hold it.

The windows will operate for up to 10 minutes after you turn off the ignition switch. Opening either front door cancels this function.

⚠WARNING

Closing a power window on someone's hands or fingers can cause serious injury.

Make sure your passengers are away from the windows before closing them.

When you push the MAIN switch in, the switch is off, and the passenger windows cannot be raised or lowered. To cancel this feature, push on the switch again to get it to pop out. Keep the MAIN switch off when you have children in the vehicle so they do not injure themselves by operating the windows unintentionally.

AUTO – To open or close either front window fully, push or pull the window switch firmly down or up to the second detent, and release it. The window will automatically go up or down all the way. To stop the window, pull or push the window switch briefly.

To open or close either front window partially, push down or pull back on the window switch lightly to the first detent and hold it. The window will stop when you release the switch.

AUTO REVERSE – If either front window senses any obstacle while it is closing automatically, it will reverse direction and then stop. To close the window, remove the obstacle, then use the window switch again.

Auto reverse stops sensing when the window is almost closed. You should always check that all passengers and objects are away from the window before closing it.

NOTE: The driver's window auto reverse function is disabled when you continuously pull up the switch.

Turn the ignition switch to the ON (II) position before operating the moonroof switch on the ceiling console.

To open the moonroof fully, pull back the moonroof switch firmly. The moonroof opens all the way. To stop the moonroof from opening fully, briefly move the switch in either direction.

To tilt the moonroof, push the center of the moonroof switch straight up. To stop the moonroof from tilting fully open, push the moonroof switch forward.

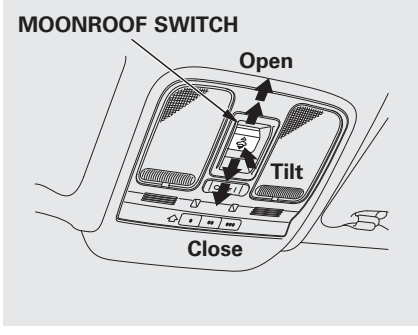

To open or close the moonroof partially, pull or push the moonroof switch lightly to the first detent and hold it. The moonroof will stop when you release the switch.

To close the moonroof fully, push the moonroof switch forward to the second detent, then release it. The moonroof closes all the way. To stop the moonroof from closing all the way, briefly move the switch in either direction.

⚠WARNING

Opening or closing the moonroof on someone's hands or fingers can cause serious injury.

Make sure all hands and fingers are clear of the moonroof before opening or closing it.

The moonroof has a key-off delay. You can open and close the moonroof for up to 10 minutes after you turn off the ignition switch. The key-off delay cancels as soon as you open either front door. You must then turn the ignition switch to the ON (II) position for the moonroof to operate.

NOTICE

If you try to open the moonroof in below-freezing temperatures, or when it is covered with snow or ice, you can damage the moonroof panel or motor.

Auto Reverse

If the moonroof runs into any obstacle while it is closing automatically, it will reverse direction, and then stop. To close the moonroof, remove the obstacle, then use the moonroof switch again.

Auto reverse stops sensing when the moonroof is almost closed. You should always check that all passengers and objects are away from the moonroof before closing it.

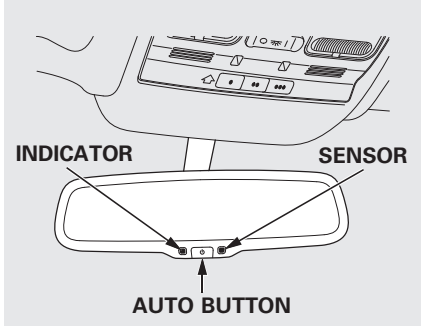

Keep the inside and outside mirrors clean and adjusted for best visibility. Be sure to adjust the mirrors before you start driving.

The inside mirror can automatically darken to reduce glare. To turn on this feature, press the button on the bottom of the mirror. The AUTO indicator comes on as a reminder. When it is on, the mirror darkens when it senses the headlights of a vehicle behind you, then returns to normal visibility when the lights are gone. Press the button again to turn off this feature.

NOTICE

There is also a sensor on the back of the mirror. Items hung on the mirror may block this sensor and affect its performance.

On models without navigation system
When you shift to reverse with the ignition switch in the ON (II) position, the rear view is shown on the left side of the inside mirror. For more information, see page 348.

Adjusting the Power Mirrors

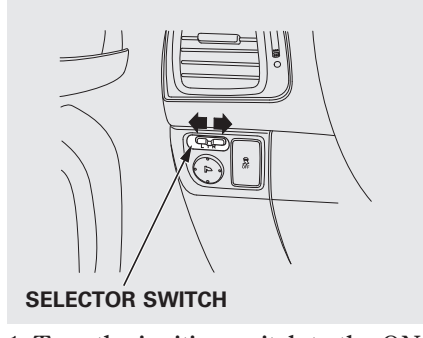

1. Turn the ignition switch to the ON (II) position.
2. Move the selector switch to L (driver's side) or R (passenger's side).

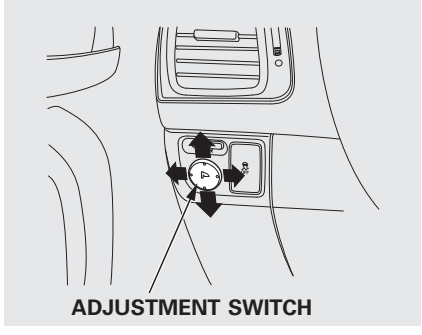
ADJUSTMENT SWITCH

3. Push the appropriate edge of the adjustment switch to move the mirror right, left, up, or down.
4. When you finish, move the selector switch to the center (off) position. This turns the adjustment switch off to keep your setting.

Outside mirror positions can be stored in the driving position memory system (see page 148).

Reverse Tilt Door Mirror

The passenger's outside mirror has a reverse tilt feature. When in reverse, the mirror will tilt down slightly to improve your view as you parallel park. Shifting out of reverse will return the mirror to its original position.

- To tilt the passenger mirror, place the selector switch in the right position.
- To turn the feature off, place the switch in the center or left position.

Heated Mirrors

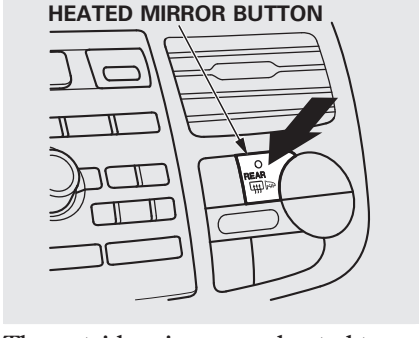

The outside mirrors are heated to remove fog and frost. With the ignition switch in the ON (II) position, turn on the heaters by pressing the button. The indicator in the button comes on as a reminder. Press the button again to turn the heaters off. Pressing this button also turns the rear window defogger on and off.

CONTINUED

This heated mirror function has a timer (see page 121).

Driving Position Memory System
Your vehicle has a memory feature for the driver's seat and outside mirror positions.

Seat, except for power lumbar, and outside mirror positions, can be stored in separate memories. You select a memorized position by pushing the appropriate button or using the appropriate remote transmitter (Memory 1 or Memory 2).

Storing a Driving Position in Memory
Store a driving position only when the vehicle is parked.

1. Turn the ignition switch to the ON (II) position. You cannot add a new driving position to the memory unless the ignition switch is in the ON (II) position. You can recall a memorized position with the ignition switch in any position.
2. Adjust the seat to a comfortable position (see page 134).
   Adjust the outside mirrors for best visibility (see page 146).

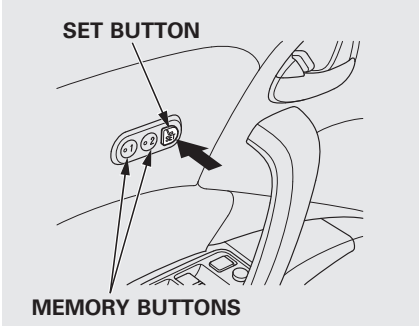

3. Press and release the SET button on the driver's door. You will hear a beep. Immediately press and hold one of the memory buttons (1 or 2) until you hear two beeps. The indicator in the memory button will come on. The current positions of the driver's seat and outside mirrors are now stored.

To cancel the storing procedure after pressing the SET button, do any of the following:

- Fail to press a memory button within 5 seconds.
- Readjust the seat position.
- Readjust the outside mirror position.

Each memory button stores only one driving position. Storing a new position erases the previous setting stored in that button's memory. If you want to add a new position while retaining the current one, use the other memory button.

Selecting a Memorized Position
To select a memorized position, do this:

1. Make sure the vehicle is parked.
2. Press the desired memory button (1 or 2) until you hear a beep, then release the button.

The system will move the seat and outside mirrors to the memorized positions. The indicator in the selected memory button will flash during movement. When the adjustments are complete, you will hear two beeps, and the indicator will remain on.

CONTINUED

To stop the system's automatic adjustment, do any of these actions:

- Press any button on the control panel: SET, 1, or 2.
- Push any of the adjustment switches for the seat.
- Shift out of Park.
- Adjust the outside mirrors.

If desired, you can use the adjustment switches to change the positions of the seat or outside mirrors after they are in their memorized positions. If you change the memorized position, the indicator in the memory button will go out. To keep this driving position for later use, you must store it in the driving position memory.

Parking Brake

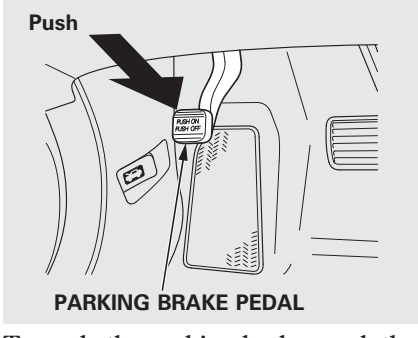

To apply the parking brake, push the pedal down with your foot. To release it, push on the pedal again. The parking brake indicator on the instrument panel should go out when the parking brake is fully released (see page 67).

NOTICE

Driving the vehicle with the parking brake applied can damage the rear brakes and axles. A beeper will sound if the vehicle is driven with the parking brake on.

You will also see a “RELEASE PARKING BRAKE” message on the multi-information display (see page 79).

Ceiling Lights

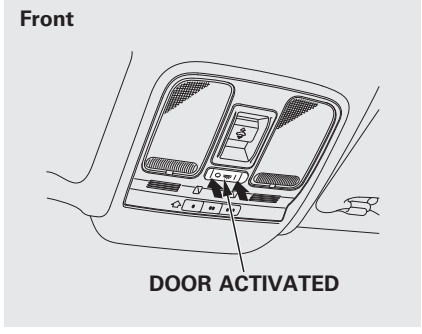

Each front and rear ceiling light has a three-position switch.

Front ceiling lights:
In the "❙" position, both front and rear ceiling lights are on all the time except when the rear ceiling light switch is in the OFF position.

In the "○" position, both front and rear ceiling lights are off all the time.

With the front ceiling lights switch in this position, the rear ceiling light does not work, and both front and rear ceiling lights do not come on when you open any door.

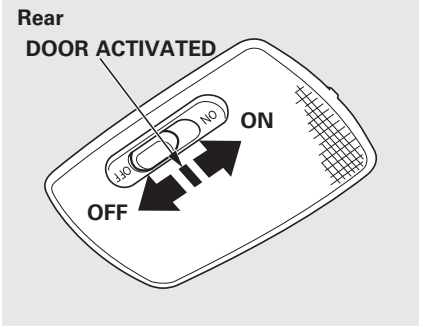

Rear ceiling light:
You can use the rear ceiling light independently. In the OFF position, the light does not come on even if the front ceiling light switch is in the "❙" position. In the ON position, the light stays on continuously except when the front ceiling light switch is in the "○" position.

CONTINUED

In the door activated position, both front and rear ceiling lights come on when you:

- Open any door.
- Remove the key from the ignition switch.
- Unlock the doors with the key, lock tab on the driver's door, master door lock switch, or remote transmitter.

After all doors are closed tightly, the light(s) dims slightly, then fades out in about 30 seconds.

If you do not open any door after unlocking the driver's door or removing the key from the ignition switch, the light(s) fade out in about 30 seconds. If you leave any door open without the key in the ignition switch, the light(s) will go off after 3 minutes.

To change the “INTERIOR LIGHT DIMMING TIME” setting, see page 98.

Individual Map Lights

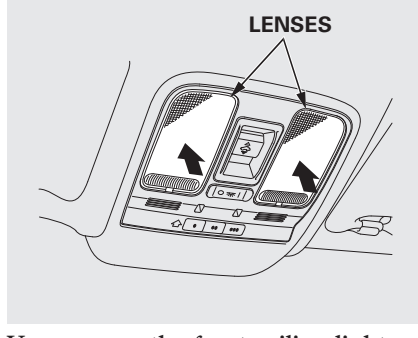

You can use the front ceiling lights whenever the lights are off.
To turn a light on or off, push its lens.

Courtesy Lights

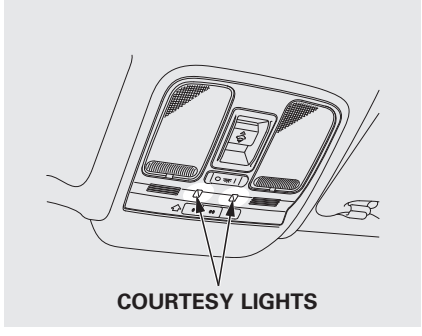

COURTESY LIGHTS

The courtesy lights in the ceiling console come on when the parking lights are turned on. You can adjust their brightness by turning the select/reset knob on the instrument panel.

In addition to the courtesy lights on the ceiling, the driver's and front passenger's ambient foot lights come on.

The courtesy light in each front door comes on when the door is opened, and goes out when the door is closed.

Your vehicle also has a courtesy light in the ignition switch. This light comes on when you:

- Open any door.
- Unlock the driver's door.
- Remove the key from the ignition switch.

After all doors are closed tightly, the light fades out in about 30 seconds.

To change the “INTERIOR LIGHT DIMMING TIME” setting, see page 98.

Cargo Area Light

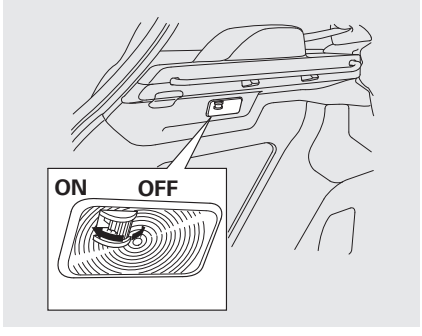

The cargo area light has a two position switch. In the OFF (right) position, the light does not come on. In the ON (left) position, the light comes on when you open the tailgate.

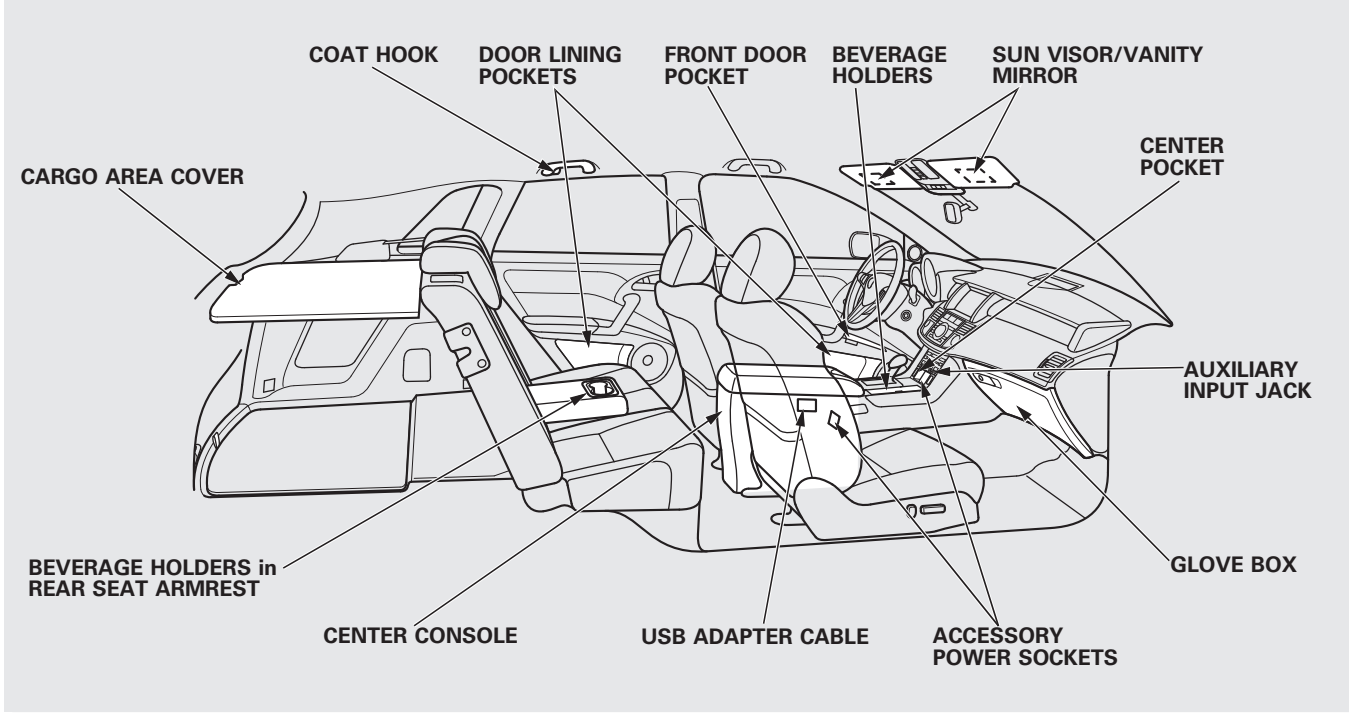
COAT HOOK
DOOR LINING POCKETS
FRONT DOOR POCKET
BEVERAGE HOLDERS
SUN VISOR/VANITY MIRROR
CENTER POCKET
CARGO AREA COVER
AUXILIARY INPUT JACK
BEVERAGE HOLDERS in REAR SEAT ARMREST
CENTER CONSOLE
USB ADAPTER CABLE
ACCESSORY POWER SOCKETS
GLOVE BOX

Glove Box

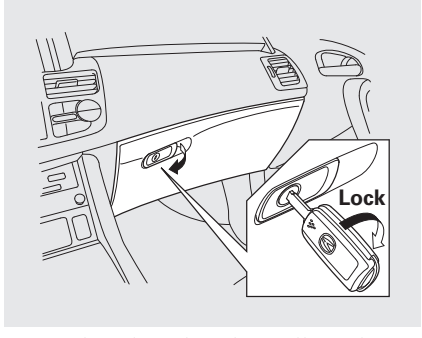

Open the glove box by pulling the handle to the left. Close it with a firm push. Lock or unlock the glove box with the master key.

⚠WARNING

An open glove box can cause serious injury to your passenger in a crash, even if the passenger is wearing the seat belt.

Always keep the glove box closed while driving.

The glove box light comes on when the parking lights are on.

Front Door Pockets

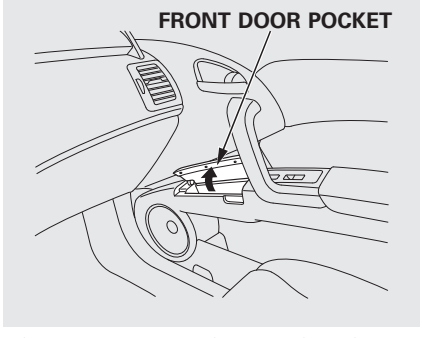

The interior of each front door has an extendable pocket for maps and other small, lightweight items. For safety, be sure both front door pockets are closed while driving.

Beverage Holders
Be careful when you are using the beverage holders. A spilled liquid that is very hot can scald you or your passengers. Spilled liquids can damage the upholstery, carpeting, and electrical components in the interior.

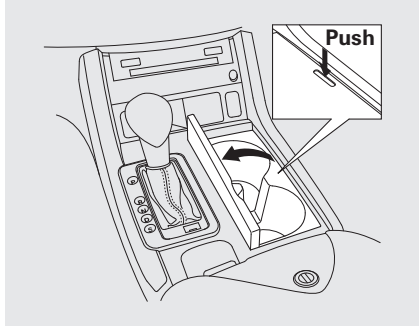

To use the front beverage holder, push on the lid. It will swing open. To close the lid, push it down until it latches.

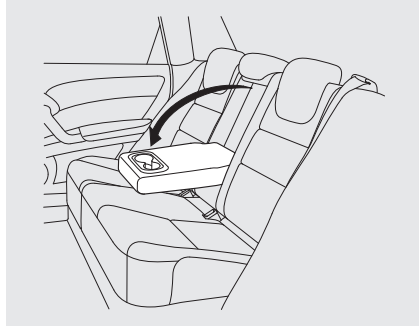

The rear seat also has a beverage holder in the center armrest. To use it, pivot the armrest down.

Accessory Power Sockets

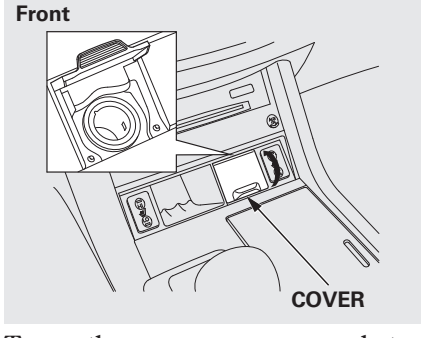

To use the accessory power socket, pull up the cover. The ignition switch must be in the ACCESSORY (I) or ON (II) position.

These sockets are intended to supply power for 12 volt DC accessories that are rated 120 watts or less (10 amps).

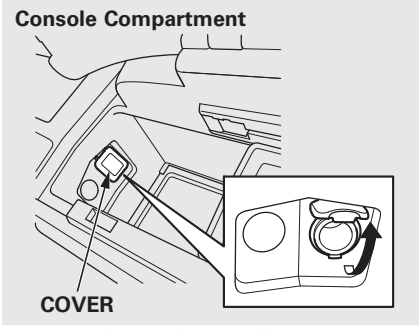

None of the sockets will power an automotive type cigarette lighter element. When both sockets are being used, the combined power rating of the accessories should be 120 watts or less (10 amps).

Sun Visor

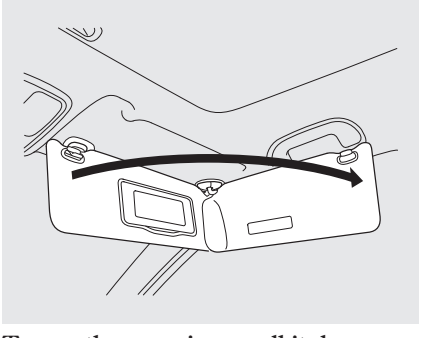

To use the sun visor, pull it down. You can also use the sun visor at the side window. Remove the support rod from the clip and swing the sun visor toward the side window.

Make sure you put the sun visor back in place when you are getting into or out of the vehicle.

Vanity Mirror

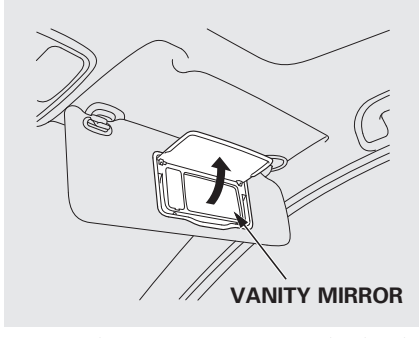

To use the vanity mirror on the back of the sun visor, pull up the cover.

The light comes on when you pull up the cover.

Console Compartment

Your vehicle has a multi-function console compartment. It includes an armrest, a coin holder, a pen holder, a card holder, a removable tray, and a console compartment with two separable shelves.

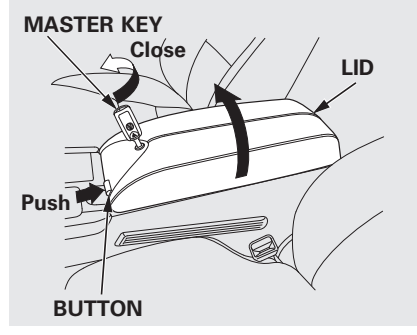

To open the console compartment, push the button and lift the lid. To close, lower the lid, and push it down until it latches.

You can lock or unlock the console compartment lid with the master key.

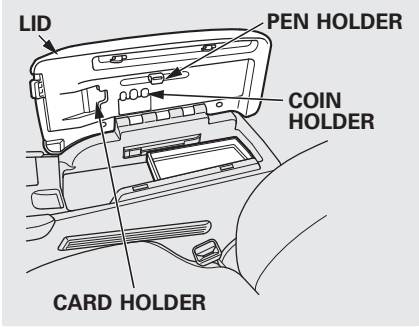

You can use the inside of the lid for a pen holder, a coin holder and a card holder.

The console compartment light comes on when the parking lights are on.

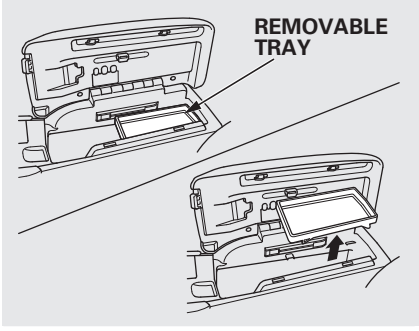

You can store small items on the removable tray.

To remove the tray, pull it out from the console compartment frame to get more space.

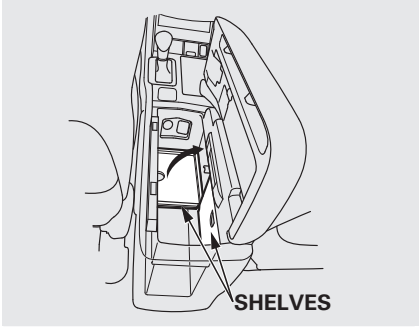

The console compartment has two shelves to divide it into two levels. To store small items, you can use the upper half of the space by putting the shelves down until they latch. The front and rear shelves can be used separately.

The items on each shelves should not exceed 11 lbs (5 kg). Heavy items may damage the shelves.

CONTINUED

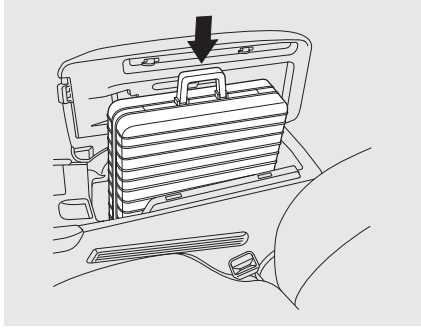

When you store a large item like a briefcase, lift the shelves up to create a large space.

The maximum dimensions of the item you can store in the console compartment are:
Length: 16.9 in (430 mm)
Height: 12.2 in (310 mm)
Width: 5.5 in (140 mm)

Cargo Area Cover



Your vehicle has a cargo area cover to conceal your luggage and protect them from direct sunlight.

Do not put any items on top of the cargo area cover. They can block your view and be thrown around the vehicle during a crash.

The cargo area cover may be removed to give you more cargo space.

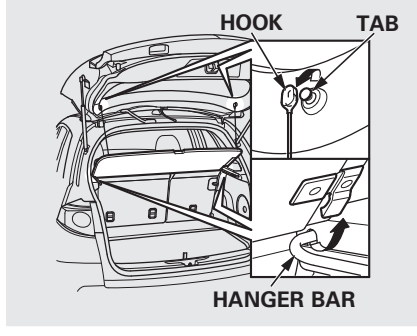

To remove it:

1. Open the tailgate. Remove the hook from the tab on the tailgate. Make sure you use both hands to prevent the cargo area cover from falling accidentally.
2. Lift and pull the rear edge of the cargo area cover slightly to unlock it from the hanger bars, then remove it straight out.

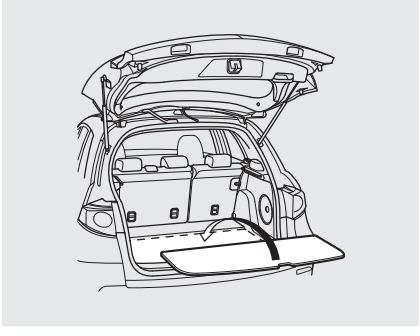

3. Place the cargo area cover on the cargo area floor.

Make sure the cargo area cover is securely placed so it will not move while you are driving.

Reverse this procedure to install the cargo area cover.

Coat Hook

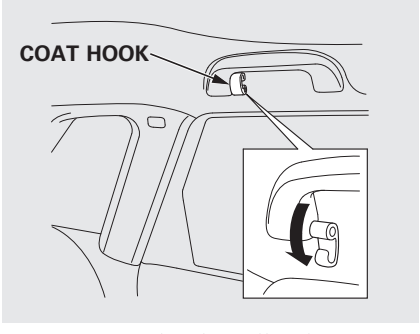

To use a coat hook, pull it down.

Make sure the coat hook is pulled up when you are not using it. This hook is not designed for large or heavy items.

The climate control system in your vehicle provides a comfortable driving environment in all weather conditions.
The standard audio system has many features. This section describes those features and how to use them.
Your vehicle has an anti-theft audio system that requires a code number to enable it. The security system helps to discourage vandalism and theft of your vehicle.

On models with navigation system
The climate control system and the audio system have a voice control feature. Refer to the navigation system manual for more information.

Climate Control System 164
Dual Temperature Control..... 169
Climate Control Sensors..... 171
Audio System..... 172
Playing the FM/AM Radio (Models without navigation system) 174
To Play the Radio..... 174
Adjusting the Sound..... 177
Playing the XM® Radio (Models without navigation system) 179
Playing Discs (Models without navigation system) 185
Disc Changer Error Messages (Models without navigation system) 195
Playing an iPod® (Models without navigation system) 197
iPod® Error Messages (Models without navigation system) 203
Playing a USB Flash Memory Device (Models without navigation system) 204
USB Flash Memory Device Error Messages (Models without navigation system) 211
Bluetooth® Audio System (Models without navigation system) 212
Audio System (Models with navigation system) 216
Interface Dial 216
Playing the FM/AM Radio (Models with navigation system)..... 217
Adjusting the Sound..... 224
Playing the XM® Radio (Models with navigation system) 228
Playing Discs (Models with navigation system)..... 239
Disc Changer Error Messages (Models with navigation system) 255
Protecting Your Discs..... 257
Playing an iPod® (Models with navigation system) 260
iPod® Error Messages (Models with navigation system) 269
Playing a USB Flash Memory Device (Models with navigation system) 270
USB Flash Memory Device Error Messages (Models with navigation system) 279
Bluetooth® Audio System (Models with navigation system) 280
FM/AM Radio Reception 287
Remote Audio Controls..... 289
Auxiliary Input Jack..... 291
Radio Theft Protection 291
Setting the Clock 293
Security System..... 294
Compass 295
Compass Operation 295
Cruise Control..... 300
HomeLink® Universal Transceiver 303
Bluetooth® HandsFreeLink® 306
AcuraLink® (U.S. models only) 332
Rearview Mirror with Rearview Camera Display 348

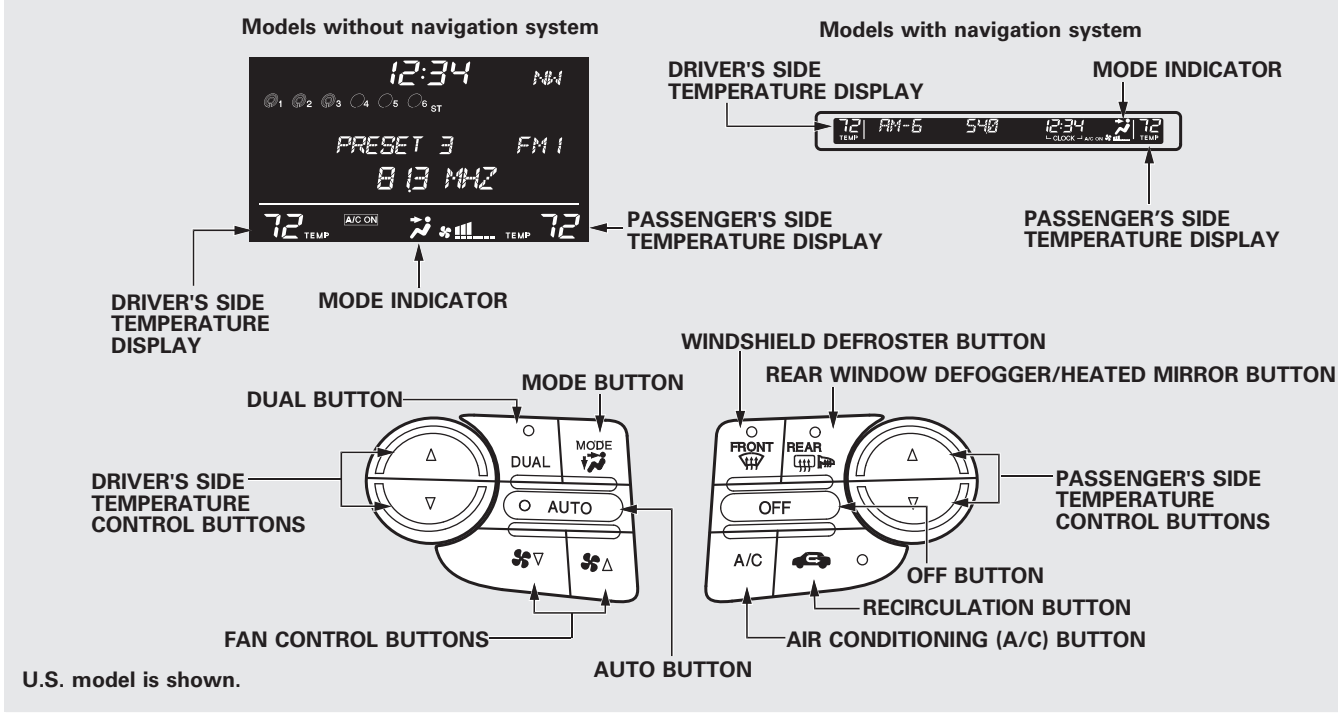

U.S. model is shown.

Proper use of the climate control system can make the interior dry and comfortable, and keep the windows clear for best visibility.

For the climate control system to provide heating and cooling, the engine must be running.

You can adjust the temperatures of the driver's side and the passenger's side independently (see page 169).

Voice Control System

On models with navigation system

The climate control system can also be operated by voice control. See the navigation system manual for complete details.

Using Automatic Climate Control

The automatic climate control system adjusts the fan speed and airflow levels to maintain the interior temperature you select.

On models with navigation system

In AUTO mode, the vehicle's interior temperature is independently regulated for the driver and passenger, based on inputs from sunlight and temperature sensors (see page 171). If one side of the vehicle is getting too much sun, the system lowers the temperature only on that side.

1. Press the AUTO button. The indicator in the button comes on.
2. Set the desired temperature by pushing the driver's side temperature control buttons (▲ or ▼). The selected temperature will show in the display.

When you push the passenger's side temperature control buttons, the indicator in the DUAL button comes on and the driver's side and passenger's side temperature can be controlled independently (see page 169).

The system automatically selects the proper mix of conditioned and/or heated air that will, as quickly as possible, raise or lower the interior temperature to your preference.

CONTINUED

When you set the temperature to its lowest limit (LO) or its highest limit (HI), the system runs at full cooling or heating only. It does not regulate the interior temperature.

In cold weather, the fan will not come on automatically until the heater starts to develop warm air.

Semi-automatic Operation
You can manually select various functions of the climate control system when it is in the AUTO mode. All other features remain automatically controlled.

Fan Control
Select the fan speed by pressing the fan control buttons (▲ or ▼). The fan speed is represented by vertical bars in the display.

Temperature Control
To adjust the desired temperature, push the temperature control buttons (▲ or ▼).

Dual Button
Press the DUAL button to select dual temperature control mode (see page 169). The indicator in the DUAL button comes on.

When you press the DUAL button again (indicator turns off), both sides adjust to the driver's side temperature.

Air Conditioning (A/C) Button
Press the A/C button to turn the air conditioning on and off. You will see A/C ON or A/C OFF in the display.

When you turn the A/C off, the system cannot regulate the inside temperature if you set the temperature control below the outside temperature.

Recirculation Button 

When the indicator in the button is on, air from the vehicle's interior is sent through the system again. When the indicator is off, air is brought in from the outside of the vehicle (fresh air mode).

The outside air intakes for the climate control system are at the base of the windshield. Keep this area clear of leaves and other debris.

The system should be left in fresh air mode under almost all conditions. Keeping the system in recirculation mode, particularly with the A/C off, can cause the windows to fog up.

Switch to recirculation mode when driving through dusty or smoky conditions, then return to fresh air mode.

Windshield Defroster Button 

This button turns the windshield defroster on and off.

When you push this button, air flows from the defroster vents at the base of the windshield, and the system automatically switches to fresh air mode and turns on the A/C. When the indicator in the button is on, the passenger's temperature cannot be set separately from the driver's.

Rear Window Defogger Button 

This button turns the rear window defogger on and off. Pushing this button also turns the mirror heaters on and off (see page 121).

CONTINUED

Mode Button
Use the MODE button to select the vents the air flows from. Some air will flow from the dashboard corner vents in all modes.

The mode indicator in the display changes to the current mode each time you press the button.

Air flows from the center and corner vents in the dashboard.

Airflow is divided between the vents in the dashboard and the floor vents.

Air flows from the floor vents.

Airflow is divided between the floor vents and the defroster vents at the base of the windshield.

To Turn Everything Off
If you press the OFF button, the climate control system shuts off completely.

- Keep the system off for short periods only.
- To keep stale air and mustiness from collecting, you should have the fan running at all times.

When the climate control system is turned off, the temperature in the display will also turn off.

Dual Temperature Control
Your vehicle has four temperature control buttons, two for the driver, and two for the front passenger.

The driver's side and the passenger's side can be controlled independently by adjusting these buttons when the indicator in the DUAL button is lit.

Temperature Control Buttons
To set the driver's side temperature to a different value than the passenger's, press the DUAL button, then press the temperature control buttons (▲ or ▼) on the driver's side. To set the passenger's side to a different value than the driver's, press the temperature control buttons (▲ or ▼) on the passenger's side. You can adjust the passenger's side without pressing the DUAL button first.

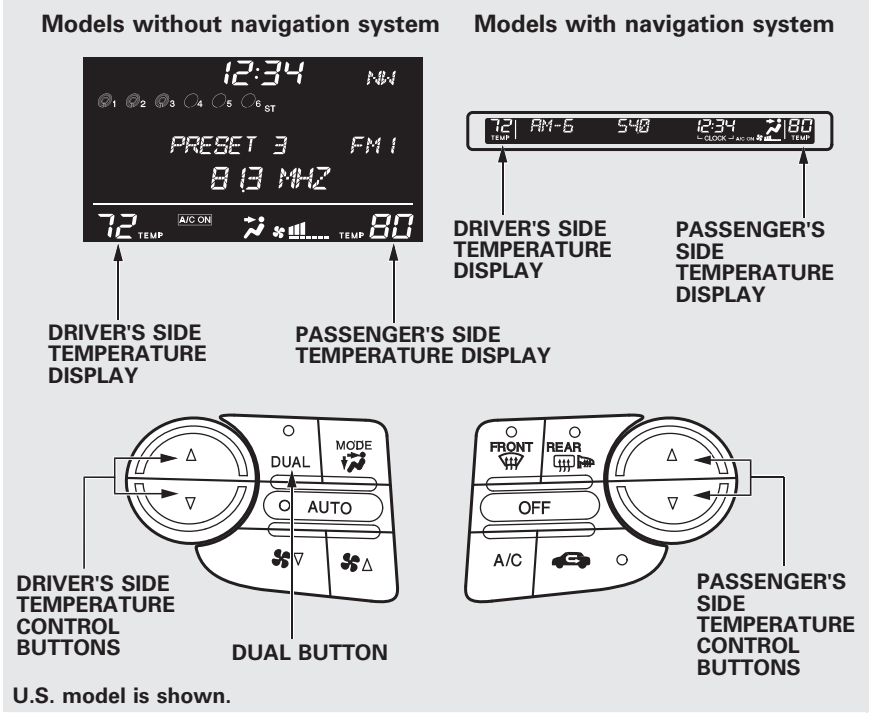

U.S. model is shown.

CONTINUED

When you set the temperature to its lower or upper limit, it is displayed as Lo or Hi.

Push AUTO or . The selected temperatures appear in the display. When the indicator in the DUAL button is off, you can adjust both sides to the same temperature by adjusting the driver's side temperature control buttons (▲ or ▼).

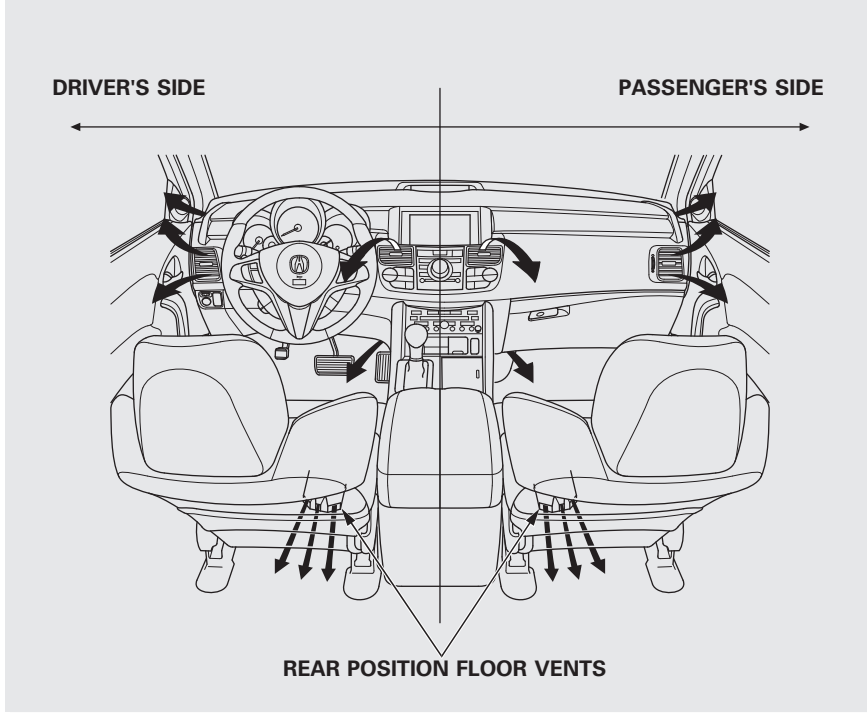

Climate Control Sensors

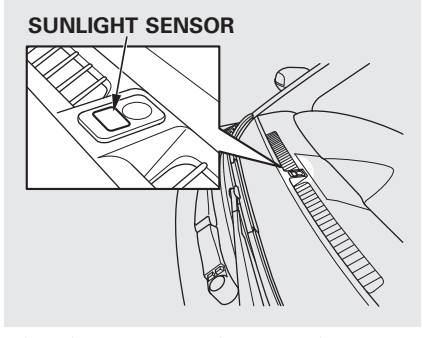

The climate control system has two sensors. A sunlight sensor is in the top of the dashboard, and a temperature sensor is next to the steering column. Do not cover the sensors or spill any liquid on them.

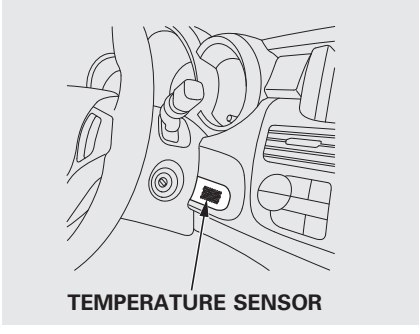

Read the appropriate pages in this section for operation of the audio systems installed in your vehicle.

- For vehicles without navigation system, see pages 174 thru 215.
- For vehicles with navigation system, see page 216 thru 286.

Models without navigation system

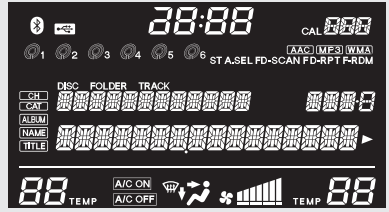

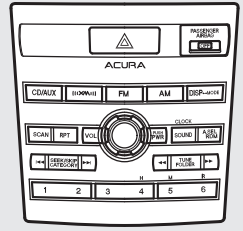

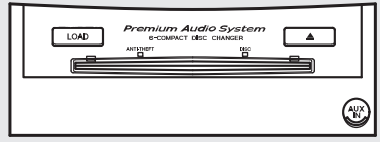

U.S. model is shown.

Models with navigation system



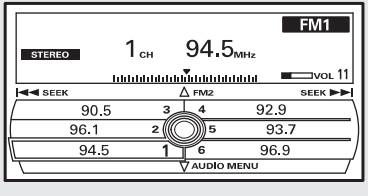

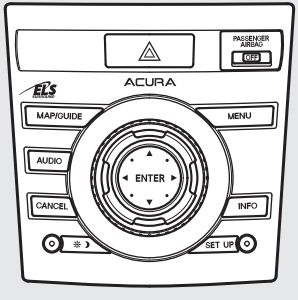

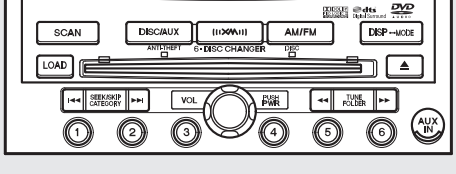

U.S. model is shown.

To Play the Radio
The ignition switch must be in the ACCESSORY (I) or the ON (II) position. Turn the system on by pushing the PWR/VOL knob, or the AM or FM button. Adjust the volume by turning the PWR/VOL knob.

The band and frequency that the radio was last tuned to is displayed. To change bands, press the AM or FM button. On the FM band, “ST” will be shown on the center display if the station is broadcasting in stereo. Stereo reproduction on AM is not available.

XM Radio information is available on page 179.

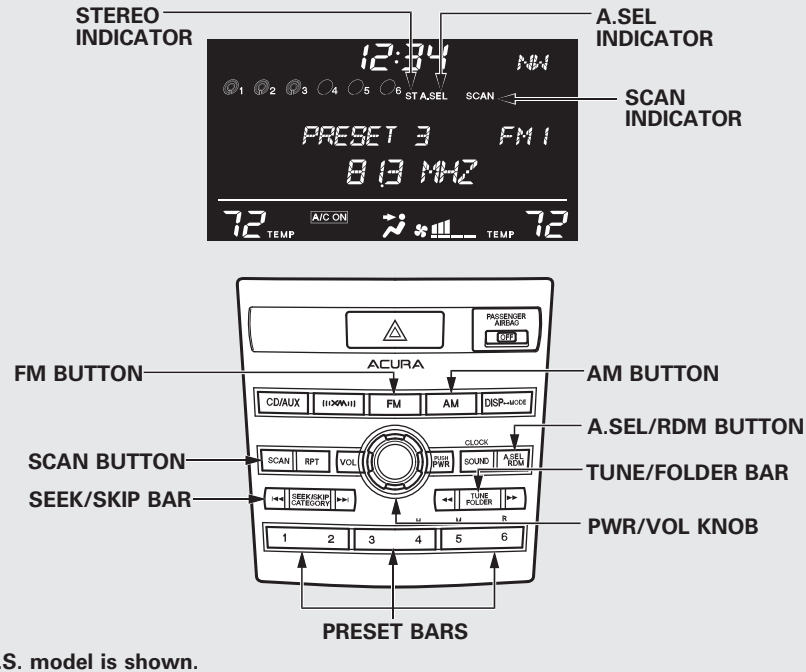

U.S. model is shown.

To Select a Station
You can use any of five methods to find radio stations on the selected band: tune, seek, scan, the preset bars, and auto select.

TUNE – Use the TUNE/FOLDER bar to tune the radio to a desired frequency. Press the ►► side of the bar to tune to a higher frequency, and the ◄◄ side of the bar to tune to a lower frequency.

If you press and hold the ◄◄ or ►► side of the bar, the frequency will begin to change rapidly. It will stop when you release it.

SEEK – The SEEK function searches up and down from the current frequency to find a station with a strong signal. To activate it, press the I◄◄ or ►►I side of the SEEK/SKIP bar, then release it.

SCAN – The SCAN function samples all stations with strong signals on the selected band. To activate it, press the SCAN button, then release it. You will see "SCAN" on the center display. When it finds a strong signal, it will stop and play that station for about 10 seconds.

If you do nothing, the system will then scan for the next strong station and play it for 10 seconds. When it plays a station you want to listen to, press the SCAN button again.

Preset – Each side of the bars (1 – 6) can store one frequency on AM and two frequencies on FM.

1. Select the desired band, AM or FM. FM1 and FM2 let you store two frequencies with each side of the preset bar.
2. Use the TUNE, SEEK, or SCAN function to tune the radio to a desired station.
3. Pick the preset number (1 – 6) for the station you want to store. Press the left or right side of the bar, and hold it until you hear a beep.
4. Repeat steps 1 through 3 to store a total of six stations on AM and twelve stations on FM.

CONTINUED

AUTO SELECT – If you are traveling and can no longer receive your preset stations, you can use the auto select feature to find stations in the local area.

To activate it, press the A.SEL/RDM button. “A.SEL” will flash on the center display, and the system will go into scan mode for several seconds. It stores the frequencies of six AM and twelve FM stations in the preset bars (1 – 6).

You will see “0” displayed if auto select cannot find a strong station for every preset bar.

If you do not like the stations auto select has stored, you can store other frequencies on the preset bars.

To turn off auto select, press the A.SEL/RDM button. This restores the presets you originally set.

Radio Frequencies and Reception
For information on AM/FM radio frequencies and reception, see page 287.

Adjusting the Sound
For information, see page 177.

Adjusting the Sound
Press the SOUND/CLOCK button repeatedly to display the BASS, TREBLE, FADER, BALANCE, SUBWOOFER and SVC (speed-sensitive volume compensation) settings.

Each mode is shown on the center display as it changes. Turn the PWR/VOL knob to adjust the setting to your liking. When the level reaches the center, you will see " C " on the center display. The system will automatically return the display to the selected audio mode about 10 seconds after you stop adjusting a mode.

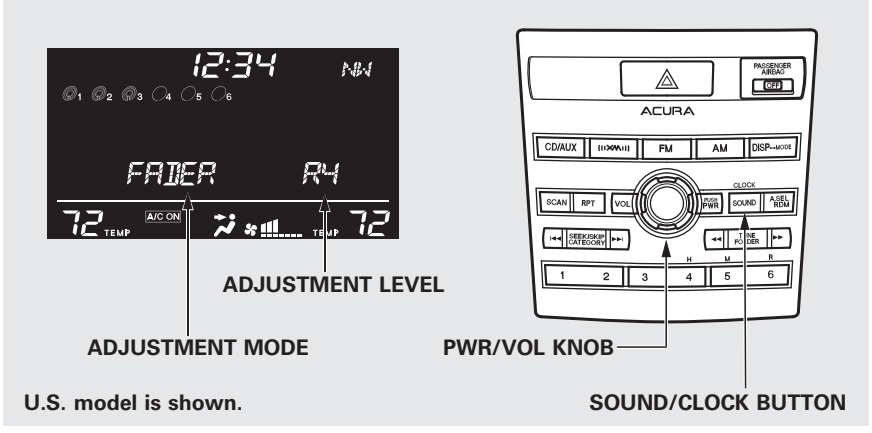

U.S. model is shown.

Treble/Bass – Use the TREBLE/BASS modes to adjust the tone to your liking. You can adjust each mode in levels between –6 and +6.

Balance/Fader – These two modes adjust the strength of the sound coming from each speaker. BALANCE adjusts the side-to-side strength, while FADER adjusts the front-to-back strength. BALANCE can be adjusted in levels between L9 and R9. FADER can be adjusted in levels between F9 and R9. When FADER adjustment level reaches F9, the subwoofer speaker will be turned off.

CONTINUED

SUBWOOFER – Use the SUBWOOFER mode to adjust the strength of the sound from the subwoofer speaker. Turn the PWR/VOL knob to the desired level (–6 to +6). Even if the adjustment level reaches –6, the subwoofer is not turned off.

Speed-sensitive volume compensation (SVC) – The SVC mode controls the volume based on vehicle speed. The faster you go, the louder the audio volume becomes. As you slow down, the audio volume decreases.

The SVC has four modes: SVC OFF, SVC LOW, SVC MID, and SVC HIGH. Turn the PWR/VOL knob to adjust the setting to your liking.

Audio System Lighting
You can use the instrument panel brightness control knob to adjust the illumination of the audio system (see page 120). The audio system illuminates when the parking lights are on, even if the system is turned off.

Your vehicle is capable of receiving XM® Radio anywhere in the United States and Canada, except Hawaii, Alaska, and Puerto Rico. XM is a registered trademark of Sirius XM Radio®, Inc. and XM CANADA® is a registered business name of Canadian Satellite Radio Inc.

XM Radio receives signals from two satellites to produce clear, high-quality digital reception. It offers many channels in several categories. Along with a large selection of different types of music, XM Radio also allows you to view channel and category selections in the audio display.

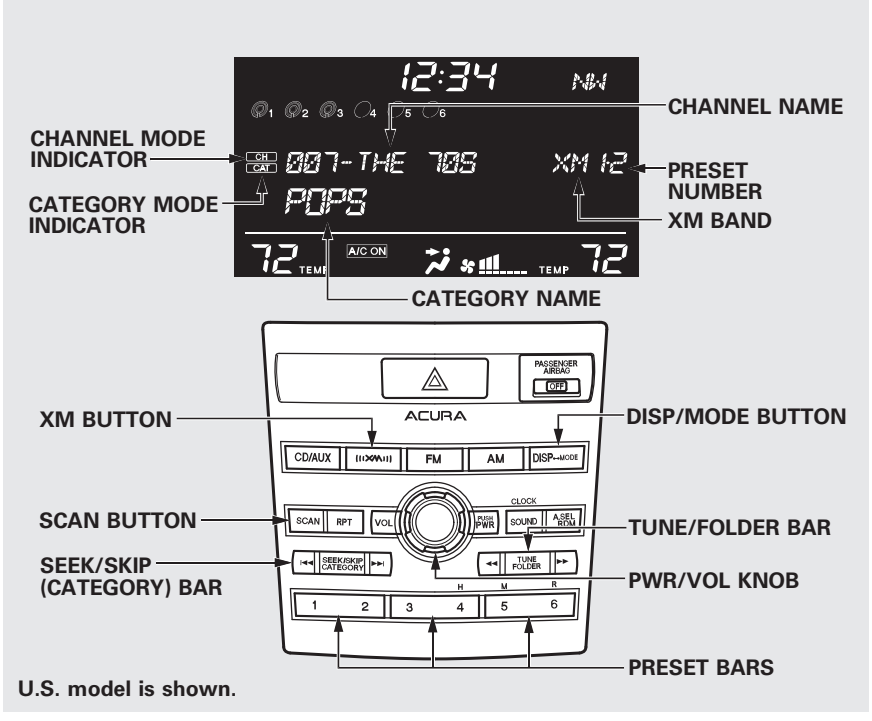

U.S. model is shown.

CONTINUED

Operating the XM Radio
To listen to the XM Radio, turn the ignition switch to the ACCESSORY (I) or ON (II) position. Push the PWR/VOL knob to turn on the audio system, and press the «XM» button. Adjust the volume by turning the PWR/VOL knob. The last channel you listened to will show on the audio display.

DISP – Each time you press and release the DISP/MODE button, the center display changes in the following sequence: Channel name, category, artist name, and music title.

MODE – To switch between the category mode and channel mode, press and hold the DISP/MODE button until the mode changes. A "CH" (channel) or "CAT" (category) mode indicator appears on the center display.

To Select a Channel
When in the satellite radio mode, you can use any of four methods to find channels: TUNE, SEEK/SKIP (CATEGORY), SCAN, and the preset bars.

TUNE – Press the TUNE/FOLDER bar to change channel selections. Press the ▶▶ side of the bar to tune to higher numbered channels, and the ◀◀ side of the bar to tune to lower numbered channels. In the category mode, you can only select channels within that category.

SEEK/SKIP (CATEGORY) – Press either side of the SEEK/SKIP (CATEGORY) bar (◀◀ or ▶▶) to select another category.

SCAN – The scan function gives you a sampling of all channels while in the channel mode. In the category mode, only the channels within that category are scanned. To activate scan, press the SCAN button. The system plays each channel in numerical order for a few seconds, then selects the next channel. When you hear a channel you want to continue listening to, press the button again.

Preset – You can store up to 12 preset channels using each side of the preset bar. Each side of the bar stores one channel from the XM1 band and one channel from the XM2 band.

To store a channel:

1. Press the «XM» button. Either XM1 or XM2 will be shown on the center display.
2. Use the tune, seek, or scan function to tune to a desired channel.

   In category mode, only channels within that category can be selected. In channel mode, all channels can be selected.
3. Pick a preset number for the channel you want to store. Press and hold the appropriate side of the preset bar until you hear a beep.
4. Repeat steps 2 and 3 to store the first six channels.
5. Press the «XM» button again. The other XM band will be shown. Store the next six channels by repeating steps 2 and 3.

Once a channel is stored, press and release the proper side of the preset bar to tune to it.

Adjusting the Sound
For information, see page 177.

XM Radio Reception
For information, see page 182.

XM Radio Display Messages

"**LOADING**" – XM is loading the audio or program information.

"**OFF AIR**" – The channel currently selected is no longer broadcasting.

CONTINUED

"**UPDATING**" − The encryption code is being updated. Wait until the encryption code is fully updated. Channels 0 and 1 should still work normally.

"**NO SIGNAL**" − The signal is currently too weak. Move the vehicle to an area away from tall buildings, and with an unobstructed view of the southern horizon.

"- - - -" − The selected channel number does not exist, or is not part of your subscription, or this channel has no artist or title information at this time.

"**ANTENNA**" − There is a problem with the XM antenna. Please consult your dealer.

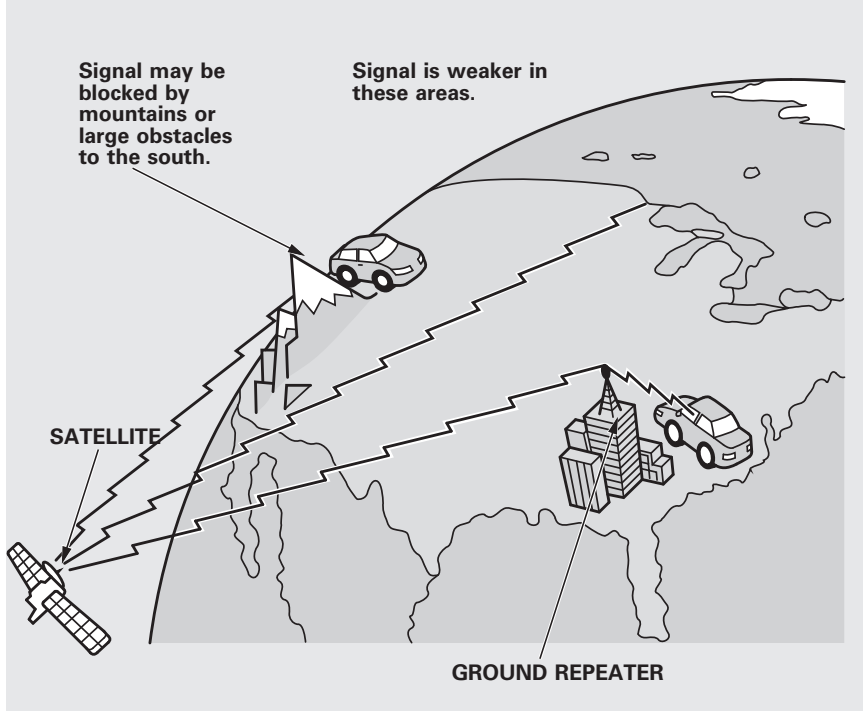

Satellite Radio Signals
Satellite radio receives signals from two satellites to produce clear, high-quality digital reception. It offers many channels in several categories. Along with a large selection of different types of music, satellite radio also allows you to view channel and category selections in the audio display.

The XM satellites are in orbit over the equator; therefore, objects south of the vehicle may cause satellite reception interruptions. To help compensate for this, ground-based repeaters are placed in major metropolitan areas.

Satellite signals are more likely to be blocked by tall buildings and mountains the farther north you travel from the equator.

Depending on where you drive, you may experience reception problems. Interference can be caused by any of these conditions:

- Driving on the north side of an east/west mountain road.
- Driving on the north side of a large commercial truck on an east/west road.
- Driving in tunnels.
- Driving on a road beside a vertical wall, steep cliff, or hill to the south of you.
- Driving on the lower level of a multi-tiered road.
- Driving on a single lane road alongside dense trees taller than 50 ft. (15 m) to the south of you.

There may also be other geographic situations or structures that could affect satellite radio reception.

As required by the FCC:
Changes or modifications not expressly approved by the party responsible for compliance could void the user's authority to operate the equipment.

This device complies with Industry Canada Standard RSS-210.
Operation is subject to the following two conditions: (1) this device may not cause interference, and (2) this device must accept any interference that may cause undesired operation of the device.

CONTINUED

Receiving XM Radio Service
If your XM Radio service has expired or you purchased your vehicle from a previous owner, you can listen to a sampling of the broadcasts available on XM radio. With the ignition switch in the ACCESSORY (I) or the ON (II) position, push the PWR/VOL knob to turn on the audio system, and press the «XM» button. A variety of music types and styles will play.

If you decide to purchase XM Radio service, contact XM Radio at *www.xmradio.com,* or at 1-800-852-9696. In Canada, contact XM CANADA at *www.xmradio.ca,* or at 1-877-209-0079. You will need to give them your radio I.D. number and your credit card number. To get your radio I.D. number, turn the TUNE knob until “0” appears in the display. Your I.D. will appear in the display.

After you've registered with XM Radio, keep your audio system in the satellite radio mode while you wait for activation. This should take about 30 minutes.

While waiting for activation, make sure your vehicle remains in an open area with good reception. Once your audio system is activated, “CAT” or “CH” will appear in the display, and you'll be able to listen to XM Radio broadcasts. XM Radio will continue to send an activation signal to your vehicle for at least 12 hours from the activation request. If the service has not been activated after 36 hours, contact XM Radio. In Canada, contact XM CANADA®.

Normal mode

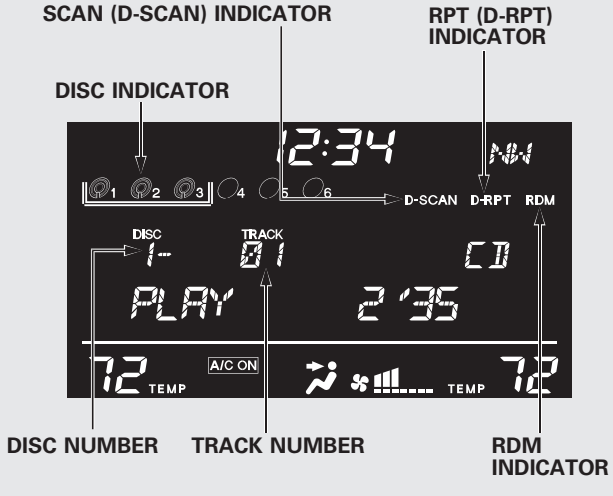

MP3/WMA mode

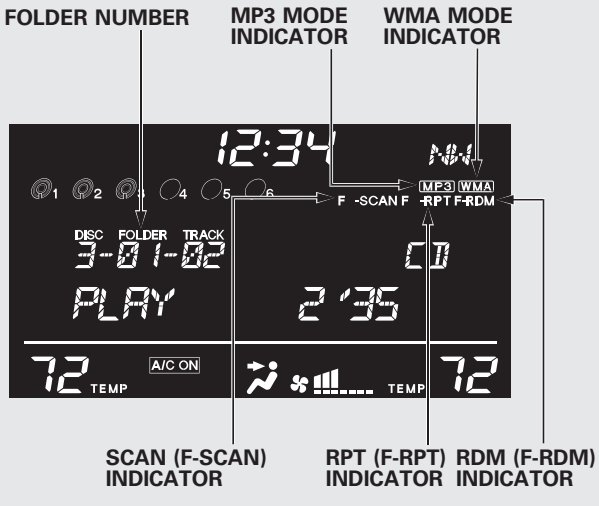

U.S. model is shown.

CONTINUED

U.S. model is shown.

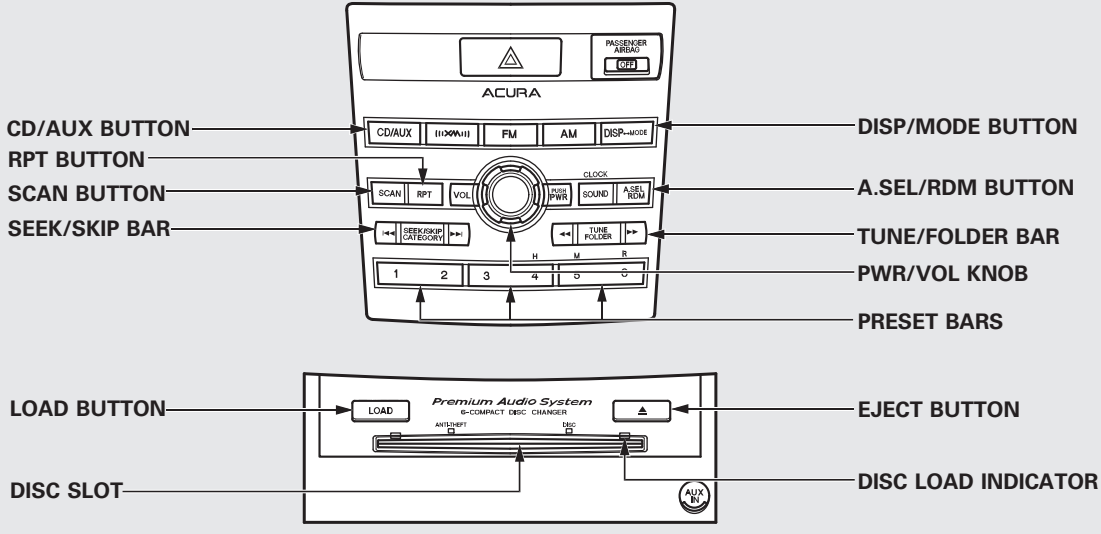

Your audio system has an in-dash CD changer that holds up to six CDs, providing several hours of continuous entertainment. You operate this CD changer with the same controls used for the radio.

To load CDs or operate the CD changer, the ignition switch must be in the ACCESSORY (I) or ON (II) position.

The disc changer can play these disc formats:

- CD (CD-DA)
- CD-R/RW

The disc packages or jackets should have one of these marks.



The changer can also play MP3 or WMA format (see page 189).

For best results when using CD-R or CD-RW discs, use only high quality discs labeled for audio use. When recording a CD-R or CD-RW, the recording must be closed in order for the disc to be played by the CD player.

NOTICE

Do not use CDs with adhesive labels. The label can curl up and cause the CD to jam in the unit.

You cannot load and play 3-inch (8-cm) discs in this system.
Video CDs and DVDs will not work in this unit.

CONTINUED

Loading CDs in the Changer
To load multiple discs in one operation:

1. Press and hold the LOAD button on the changer unit until you hear a beep. You will see “BUSY” on the center display, and disc load indicator turns red and starts blinking.
2. Insert the disc into the disc slot when the disc load indicator turns green and “LOAD” appears on the center display at the same time. Insert it only halfway; the drive will pull it in the rest of the way. You will see “BUSY” on the center display, and the disc load indicator turns red again and blinks as the CD is loaded.
3. When the disc load indicator turns green and “LOAD” appears on the center display again, insert the next CD in the slot.

   Do not try to insert a disc until “LOAD” appears. You could damage the audio unit.
4. Repeat steps 1 through 3 until all six positions are loaded. If you are not loading all six positions, press the LOAD button again after the last CD has loaded. “DISC READ” appears on the center display, then the system begins playing the last CD loaded.

If you stop loading discs before all six positions are filled, the system will wait for 10 seconds, stop the load operation, and begin playing the last disc loaded.

To load a single disc:

1. Press and release the LOAD button on the changer unit. You will see “BUSY” on the center display, and the disc load indicator turns red and starts blinking.
2. Insert a disc into the disc slot when the disc load indicator turns green and “LOAD” appears on the center display at the same time. Insert the disc only about halfway; the drive will pull it in the rest of the way. You will see the disc indicator blinking on the center display.

   Do not try to insert a disc until “LOAD” appears. You could damage the audio unit.

3. You will see “DISC READ” on the center display, then the system begins to play the CD.

You can load a CD into an empty position while a CD is playing. Select the empty position (the disc indicator is not shown on the center display) by pressing the appropriate side of the preset bars. The current CD stops playing and starts the loading sequence. The CD just loaded will play.

You can load a disc(s) in any mode (AM, FM, XM, or AUX) if you do not select an empty position.

If you press the LOAD button while a disc is playing, the system will stop playing that disc and start the loading sequence. It will then play the disc just loaded.

To Play a CD

Select the CD changer by pressing the CD/AUX button. You will see “CD” on the center display. The system will begin playing the last selected CD in the CD changer. You will see the disc and track numbers displayed.

When the system reaches the end of the disc, the system will advance to the next disc and begin to play. To select a different disc, press an appropriate side of the preset bar (1 – 6). If you select an empty position in the CD changer, the system will try to load the CD in the empty slot.

Playing an MP3/WMA Disc

The CD changer can play CD-Rs and CD-RWs compressed in MP3 and WMA format. When playing a disc in MP3 or WMA, you will see “MP3” or “WMA” on the center display. A disc can support more than 99 folders, and each folder can hold up to 255 playable files.

When there are more than 99 folders on a disc, the center display only shows two digits.

CONTINUED

NOTE: If a file on an MP3 or WMA disc is protected by digital rights management (DRM), the audio unit displays FORMAT, and then skips to the next file.

If the disc has a complex structure, it will take a while to read the disc before the system begins to play it.

Depending on the software the files were made with, it may not be possible to play some files, or display some text data.

Name Display Function

Each time you press the DISP/MODE button while playing a CD (CD-DA), the center display changes from album name, to track name, to artist name, and then to normal display. If the disc was not recorded with CD-TEXT, "NO INFO" will be shown on the center display.

When playing a disc compressed in MP3/WMA format, the display changes from folder name, to file name, to artist tag, to album tag, to track tag, and then to normal display each time you press the DISP/MODE button. If the disc was not recorded with this information, "NO INFO" will be shown on the center display.

If the title is too long, it will not show all at once. Press and hold the DISP/MODE button, and the rest of the title will show on the center display.

You will also see the album and track name (CD-TEXT), or the folder and file name (MP3/WMA) under these conditions:

- When you insert a disc, and the system begins to play.
- Each time a new track, file, or folder plays.

To Change or Select Tracks/Files
While a disc is playing you can use the SEEK/SKIP bar to select passages and change tracks (files in MP3/WMA mode).

In MP3/WMA mode, use the TUNE/FOLDER bar to select folders on the disc, and use the SEEK/SKIP bar to change files.

SEEK/SKIP – Each time you press and release the ►►| side of the SEEK/SKIP bar, the system skips forward to the beginning of the next track (file in MP3/WMA mode). Press and release the |◄◄ side of the bar to skip backward to the beginning of the current track/file. Press it again to skip to the beginning of the previous track/file.

To move rapidly within a track/file, press and hold the ►►| or |◄◄ side of the SEEK/SKIP bar.

In MP3/WMA mode
FOLDER SELECTION – To select a different folder, press and release the ►► side of the TUNE/FOLDER bar to move to the beginning of the next folder. Press and release the ◄◄ side of the bar to move to the beginning of the previous folder.

REPEAT – This feature, when activated, continuously replays the current track (file in MP3/WMA mode). To activate it, press and release the RPT button. You will see "RPT" on the center display. To turn off this feature, press the RPT button for more than 2 seconds.

CONTINUED

In MP3/WMA mode
FOLDER REPEAT – This feature, when activated, replays all the files in the current folder in the order they are compressed in MP3/WMA. To activate folder repeat mode, press the RPT button twice. You will see "F-RPT" on the center display. Press and hold the RPT button for more than 2 seconds to turn off this feature.

DISC REPEAT – Press the RPT button twice to continuously replay the current CD. In MP3/WMA mode, press the RPT button three times. You will see "D-RPT" on the center display. Press and hold the RPT button for more than 2 seconds to turn off this feature.

Each time you press and release the RPT button, the mode changes from repeat to folder repeat, disc repeat then to normal play.

SCAN – The scan function samples all the tracks (files in a folder in MP3/WMA mode) on the current disc in the order they are recorded on the CD. To activate this feature, press and release the SCAN button. You will see "SCAN" and the track/file number flashing on the center display. The system will then play the track/file for approximately 10 seconds. To hear the rest of the track/file, press and hold the SCAN button for more than 2 seconds. If you do nothing, the system will then play the following tracks/files for 10 seconds each. When the system finishes scanning all the tracks/files on the current disc, the system returns to the track/file it first started scanning with, scan is canceled and the system begins to play that track/file normally.

In MP3/WMA mode
FOLDER SCAN – The folder scan function samples the first file of each folder on the current disc in the order they are compressed in MP3/WMA. To activate this feature, press the SCAN button twice. The first file of each folder plays for about 10 seconds. You will see "F-SCAN" and the folder number flashing on the center display. To hear the rest of the file in the folder currently scanning, press and hold the SCAN button for more than 2 seconds. When the system finishes scanning all the folders on the current disc, the system returns to the folder it started scanning with, folder scan is canceled and the system begins to play that folder normally.

DISC SCAN – The disc scan function samples the first track (file in MP3/WMA mode) on each disc within the changer in numerical order. To activate this feature, press the SCAN button twice. In MP3/WMA mode, press the SCAN button three times. The first track/file on each disc plays for about 10 seconds. You will see "D-SCAN" and disc number flashing on the center display. To hear the rest of the track/file on the disc currently scanning, press and hold the SCAN button for more than 2 seconds. When the system finishes scanning all the discs, disc scan is canceled and the system begins to play the first track/file of that disc normally.

Each time you press and release the SCAN button, the mode changes from scan to folder scan, disc scan then to normal play.

RANDOM (Random within a Disc) – This feature plays the tracks (all files in each folder in MP3/WMA mode) within a disc in random order. To activate it, press and release the A.SEL/RDM button. In MP3/WMA mode, press the A.SEL/RDM button twice to select random play within a disc. You will see "RDM" on the center display. Press and hold the A.SEL/RDM button for more than 2 seconds to return to normal play.

In MP3/WMA mode
FOLDER RANDOM – This feature plays the files within a folder in random order, rather than in the order they are compressed in MP3/WMA. To activate it, press the A.SEL/RDM button once. You will see "F-RDM" on the center display. The system will then select and play files randomly. This continues until you deactivate folder random play by pressing and holding the RDM button for more than 2 seconds.

Each time you press and release the A.SEL/RDM button, the mode changes from folder random to random, then to normal play.

CONTINUED

To Pause a Disc
To pause a disc, press the corresponding number of the current disc on the appropriate side of the preset bars. To play the disc again, press the preset bar again.

To Stop Playing a Disc
If you turn the system off while a CD is playing, either with the PWR/VOL knob or by turning off the ignition switch, the disc will stay in the drive. When you turn the system back on, the CD will begin playing where it left off.

To take the system out of CD mode, press the AM or FM, CD/AUX, or «XM» button. To return to CD mode, press the CD/AUX button. The system will continue at the same point that it left off.

Removing CDs from the Changer
To remove the disc that is currently playing, press and release the eject (⏏) button. You will see "EJECT" on the center display. When you remove the disc from the slot, the system begins the load sequence so you can load another disc in that position. If you do not load another CD within 10 seconds, the system selects the previous mode (AM, FM1, FM2, or XM).

If you do not remove the CD from the slot, the system will reload the CD after 10 seconds and put the CD changer in pause mode. To begin playing the CD, press the CD/AUX button.

To remove a different CD from the changer, select it with the appropriate side of the preset bar. When that CD begins playing, press the eject button.

Press and hold the eject button until you hear a beep to remove all the discs from the changer.

You can also eject discs when the ignition switch is off by pressing the eject button. The disc that was last selected is ejected first. You can eject the rest of the discs one at a time.

Protecting Discs
For information on how to handle and protect compact discs, see page 257.

Disc Changer Error Messages
For information, see page 195.

Adjusting the Sound
For information, see page 177.

If you see an error message in the display while playing a CD, find the cause in the chart to the right. If you cannot clear the error message, take the vehicle to your dealer.

Error Message	Cause	Solution
CHECK DISC	FOCUS Error	Press the EJECT button, and pull out the disc. Make sure it is inserted correctly in the disc changer. Make sure the disc is not scratched or damaged. For more information, see page 258.
MECH ERROR	Mechanical Error	Press the EJECT button, and pull out the disc. Check the disc for damage or deformation. For more information, see page 258. If the disc cannot be pulled out, or the error message does not disappear after the disc is ejected, see your dealer.
HOT	High Temperature	Will disappear when the temperature returns to normal.
CHECK DISC LOAD	Check Disc	Press the EJECT button, and pull out the disc. Make sure a playable disc is in the CD changer (see page 187).
CHANGER ERROR	Check Disc and Changer Error	Press the EJECT button, and pull out the disc. Check the disc for damage or deformation. For more information, see page 258. If the disc cannot be pulled out, or the error message does not disappear after the disc is ejected, see your dealer.

CONTINUED

Disc Changer Error Messages (Models without navigation system)

The chart on the right explains the error messages you may see in the display while playing a disc.

If you see an error message in the display while playing a disc, press the eject button. After ejecting the disc, check it for damage or deformation. If there is no damage, insert the disc again.
For the additional information on damaged discs, see page 258.

The audio system will try to play the disc. If there is still a problem, the error message will reappear. Press the eject button, and pull out the disc.
Insert a different disc. If the new disc plays, there is a problem with the first disc. If the error message cycle repeats and you cannot clear it, take your vehicle to a dealer.

Error Message	Cause	Solution
FORMAT	Track/File format not supported	Current track will be skipped. The next supported track or file plays automatically.
BAD DISC PLEASE CHECK OWNER'S MANUAL PUSH EJECT	Mechanical error	Press the EJECT button, and pull out the disc(s). Check the disc for serious damage, signs of deformation, excessive scratches, and/or dirt (see page 258.) Insert the disc again. If the code does not disappear, or the disc(s) cannot be removed, consult your dealer. Do not try to force the disc out of the player.
BAD DISC PLEASE CHECK OWNER'S MANUAL	Servo error	

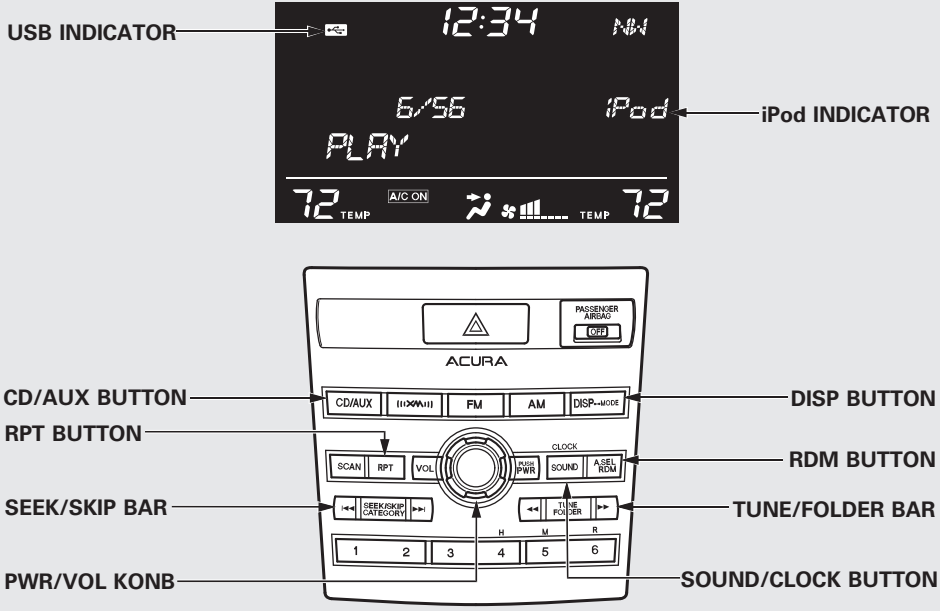

U.S. model is shown.

CONTINUED

To Play an iPod®
This audio system can operate the audio files on the iPod® with the same controls used for the disc player. To play an iPod, connect it to the USB adapter cable in the console compartment by using your dock connector, then press the CD/AUX button. The ignition switch must be in the ACCESSORY (I) or ON (II) position. The iPod will also be charged with the ignition switch in these positions.

The audio system reads and plays sound files to be playable on the iPod. The system cannot operate an iPod as a mass storage device. The system will only play songs stored on the iPod with iTunes.

iPod and iTunes are registered trademarks owned by Apple Inc.

iPod models confirmed to be compatible with your audio system using the USB adapter cable are:

Model
iPod classic 80/160 G
iPod classic 120 G
iPod classic 160 G (launch in 2009)
iPod (5th generation)
iPod nano
iPod touch

This system may not work with all software versions of these devices.

NOTE:

- Do not connect your iPod using a hub.
- Do not keep the iPod in the vehicle. Direct sunlight and high heat will damage it.
- Do not use an extension cable between the USB adapter cable equipped with your vehicle and your dock connector.
- We recommend backing up your data before playing it.
- Some devices cannot be powered or charged via the USB adapter, if this is the case use the accessory adapter to supply power to your device.

Connecting an iPod

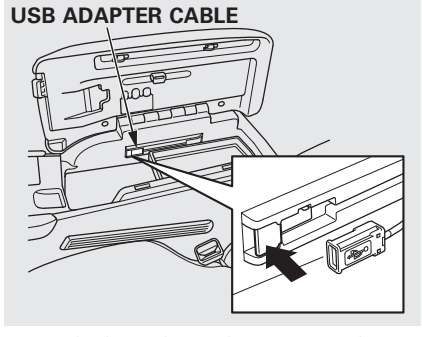

1. Push the release button to release the USB adapter cable.

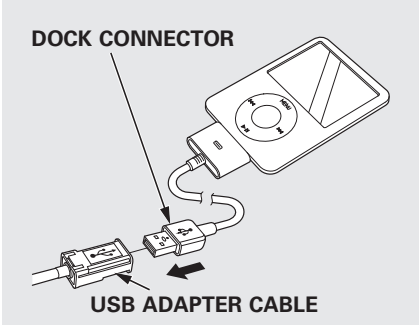

2. Connect your dock connector to the iPod correctly and securely.
3. Install the dock connector to the USB adapter cable securely.

If the iPod indicator does not appear in the center display, check the connections, and try to reconnect the iPod a few times.

If the audio system still does not recognize the iPod, the iPod may need to be reset. Follow the instructions that came with your iPod, or you can find reset instructions online at *www.apple.com/ipod.*

CONTINUED

Text Data Display Function
Each time you press the DISP/MODE button, the display mode switches between the album name, the song name, the artist name, or name off (which turns off the text display).

The center display shows up to about 16 characters of the selected data. If the text data has more than 16 characters, you will see the first 16 characters and the ▶ indicator in the center display. Press and hold the DISP/MODE button until the next 16 characters are shown.

To Change or Select Files
Use the SEEK/SKIP bar while an iPod is playing to select passages and change files.

SKIP – Each time you press and release the ▶▶| side of the SEEK/SKIP bar, the system skips forward to the beginning of the next file. Press and release the |◀◀ side of the bar, to skip backward to the beginning of the current file. Press it again to skip to the beginning of the previous file.

To move rapidly within a file, press and hold either side (▶▶| or |◀◀) of the SEEK/SKIP bar.

To Select a File from iPod Menu



You can also select a file from any list on the iPod menu: playlists, artists, albums, and songs, by using the SOUND/CLOCK button and PWR/VOL knob. Press and release the SOUND/CLOCK button to switch the display to an iPod menu, then turn the PWR/VOL knob to select a desired list. Press and release the SOUND/CLOCK button to set your selection.

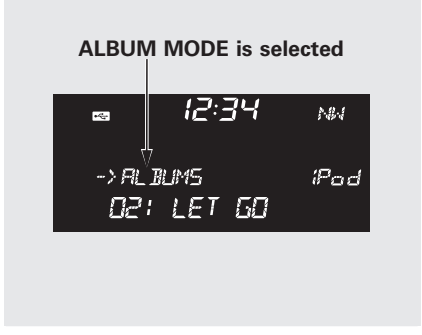

The center display shows items on the selected list. Press either side of the TUNE/FOLDER bar repeatedly. After making a selection, wait for a few seconds to set your selection.

If you select “ALL,” all available files on the selected list are played.

To Select Repeat or Shuffle Mode:
You can select any type of repeat and shuffle mode by using the RPT button or the A.SEL/RDM button.

REPEAT – This feature continuously plays a file. To activate the repeat feature, press the RPT button. You will see “RPT” in the center display. To turn it off, press the RPT button again.

SHUFFLE ALL – This feature plays all available files in a selected list (playlists, artists, albums or songs) in random order. To activate the shuffle all feature, press the A. SEL/RDM button. You will see “RDM” in the center display. To turn it off, press and hold the A.SEL/RDM button.

SHUFFLE ALBUM – This feature plays all available albums in a selected list (playlists, artists, albums or songs) in random order. The files in each album are played in the recorded order. To activate the shuffle album feature, press the A. SEL/RDM button repeatedly. You will see “F-RDM” in the center display. To turn it off, press and hold the A.SEL/RDM button.

Each time you press the A.SEL/RDM button, the mode changes from shuffle all play to shuffle album play, then to normal play.

NOTE:
Available operating functions vary on the model or version. Some functions may not be available on the vehicle's audio system.

CONTINUED

To Stop Playing Your iPod
To play the radio, press the AM/FM, or «XM» button. Press the CD/AUX button to switch between disc (if a disc is loaded), *Bluetooth®* Audio, and the iPod.

Disconnecting an iPod
You can disconnect the iPod at any time when you see the "OK to disconnect" message* in the iPod display. Always make sure you see the "OK to disconnect" message in the iPod display before you disconnect it. Make sure to follow the iPod's instructions on how to disconnect the dock connector from the USB adapter cable.

*: The displayed message may vary on the model or version. On some models, there is no message to disconnect.

If you reconnect the same iPod, the system may begin playing where it left off, depending on what mode the iPod is in when it is reconnected.

iPod Error Messages
For information, see page 203.

If you see an error message in the center display while playing an iPod, find the solution in the chart to the right. If you cannot clear the error message, take your vehicle to your dealer.

Error Message	Cause	Solution
USB ERROR	USB ROM error	There is a problem with the USB adapter unit.
BAD USB DEVICE PLEASE CHECK OWNERS MANUAL	Abnormal power source	Appears when the overcurrent protection feature of the system stops supplying power to USB because an incompatible device is connected. Disconnect the device. Then, turn the audio system off, and turn it on again. Do not reconnect the device that caused the error.
NO SONG	No files in iPod	Appears when the iPod is empty. Store some files in the iPod.
UNSUPPORTED VER.	Use of unsupported iPod	Appears when an unsupported iPod is connected. See page 198 for specification information on iPods. If it appears when a supported iPod is connected, update the iPod software to the newer version.
CONNECT RETRY	Recognition failure of iPod	Appears when the system does not acknowledge the iPod. Reconnect the iPod.

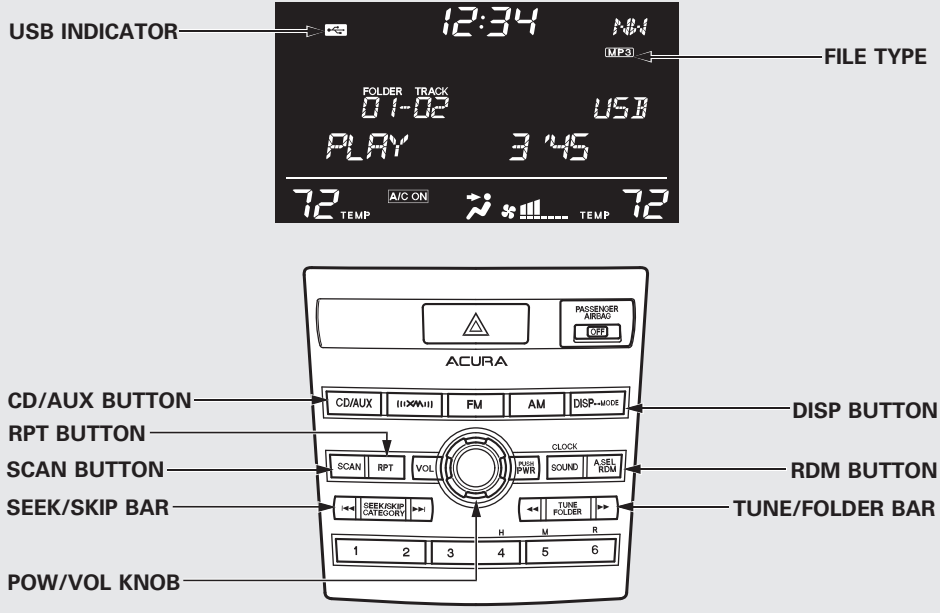

U.S. model is shown.

To Play a USB Flash Memory Device

This audio system can operate the audio files on a USB flash memory device with the same controls used for the in-dash disc changer. To play a USB flash memory device, connect it to the USB adapter cable in the console compartment, then press the CD/AUX button. The ignition switch must be in the ACCESSORY (I) or ON (II) position.

The audio system reads and plays the audio files on the USB flash memory device in MP3, WMA or AAC* formats. Depending on the format, the display shows MP3, WMA or AAC when a USB flash memory device is playing.

*: Only AAC format files recorded with iTunes are playable on this audio unit.

The recommended USB flash memory devices are 256 MB or higher, and formatted with the FAT file system. Some digital audio players may be compatible as well.

Some USB flash memory devices (such as devices with security lock-out features, etc.) will not work in this audio unit.

CONTINUED

NOTE:

- Do not use a device such as a card reader or hard drive as the device or your files may be damaged.
- Do not connect your USB flash memory device using a hub.
- Do not use an extension cable to the USB adapter cable equipped with your vehicle.
- Do not keep a USB flash memory device in the vehicle. Direct sunlight and high heat will damage it.
- We recommend backing up your data before playing a USB flash memory device.
- Depending on the type and number of files, it may take some time before they begin to play.
- Depending on the software the files were made with, it may not be possible to play some files, or display some text data.
- Some devices cannot be powered or charged via the USB adapter, if this is the case use the accessory adapter to supply power to your device.

Depending on the type of encoding and writing software used, there may be cases where character information does not display properly.

Even if recorded in MP3, WMA or AAC format, unsupported files cannot be played. If the system finds an unsupported file, the screen displays UNPLAYABLE, and then skips to the next file.

Connecting a USB Flash Memory Device

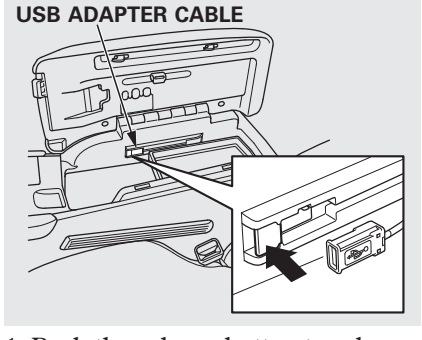

1. Push the release button to release the USB adapter cable.

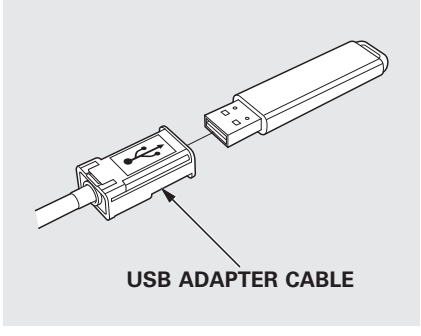

2. Connect the USB flash memory device to the USB adapter cable correctly and securely.

When the USB flash memory device is connected, the USB indicator is shown in the center display.

Text Data Display Function

Each time you press the DISP/MODE button, the display mode shows you in sequence, the folder name, the file name, the artist name, the album name, the song name, or name off (which turns off the text display).

The center display shows up to about 16 characters of the selected data. If the text data has more than 16 characters, you will see the first 16 characters and the ▶ indicator in the center display. Press and hold the DISP/MODE button until the next 16 characters are shown.

CONTINUED



FOLDER SELECTION – To select a different folder, press and release either side of the TUNE/FOLDER bar. Press the ▶▶ side to skip to the next folder, and press the ◀◀ side to skip to the beginning of the previous folder.

To Change or Select Files
Use the SKIP bar while a USB flash memory device is playing to change files.

SKIP – Each time you press and release the ▶▶| side of the SEEK/SKIP bar, the system skips forward to the beginning of the next file. Press and release the |◀◀ side of the bar, to skip backward to the beginning of the current file. Press it again to skip to the beginning of the previous file.

To move rapidly within a file, press and hold either side (▶▶| or |◀◀) of the SEEK/SKIP bar.

To Select Repeat, Random or Scan Mode:
You can select any type of repeat, random and scan modes by using the RPT button, A.SEL/RDM button, or SCAN button.

REPEAT – This feature continuously plays a file. To activate the repeat feature, press the RPT button. You will see “RPT” in the center display. To turn it off, press and hold the RPT button.

FOLDER REPEAT – This feature replays all the files in the selected folder in the order they are stored. To activate the folder repeat feature, press the RPT button repeatedly. You will see “F-RPT” in the center display. To turn it off, press and hold the RPT button.

Each time you press and release the RPT button, the mode changes from file repeat to folder repeat, then to normal play.

FOLDER RANDOM – This feature plays the files in the selected folder in random order. To activate the folder random feature, press the A.SEL/RDM button. You will see “F-RDM” in the center display. To turn it off, press and hold the A.SEL/RDM button.

RANDOM – This feature plays all the files in random order. To activate the track random feature, press the A.SEL/RDM button repeatedly. You will see “RDM” in the center display. To turn it off, press and hold the A.SEL/RDM button.

Each time you press and release the A.SEL/RDM button, the mode changes folder random to random play, then to normal play.

SCAN – This feature samples all files in the selected folder in the order they are stored. To activate the scan feature, press the SCAN button. You will see “SCAN” in the center display. You will get a 10 second sampling of each file in the folder. Press and hold the SCAN button to get out of the scan mode and play the last file sampled.

FOLDER SCAN – This feature samples the first file in each folder in the order they are stored. To activate the folder scan feature, press the SCAN button repeatedly. You will see “F-SCAN” in the center display. You will get a 10 second sampling of the first file in each folder. Press and hold the SCAN button to get out of the folder scan mode and play the last file sampled.

CONTINUED

Each time you press and release the SCAN button, the mode changes from file scan to folder scan, then to normal play.

To Stop Playing a USB Flash Memory Device

To play the radio, press the FM, AM or «» button. Press the CD/AUX button to switch between disc (if a disc is loaded) and *Bluetooth®* Audio.

You can also press the MODE button on the steering wheel to change modes.

If you reconnect the same USB flash memory device, the system will begin playing where it left off.

Disconnecting a USB Flash Memory Device

You can disconnect the USB flash memory device at any time even if the USB mode is selected on the audio system. Always follow the USB flash memory device's instructions when you remove it.

When you disconnect the USB flash memory device while it is playing, the center display shows “USB NO DATA.”

If you reconnect the same USB flash memory device, the system will begin playing where it left off.

USB Flash Memory Device Error Messages

For information, see page 211.

USB Flash Memory Device Error Messages (Models without navigation system)

If you see an error message in the center display while playing a USB flash memory device, find the solution in the chart to the right. If you cannot clear the error message, take your vehicle to your dealer.

Error Message	Cause	Solution
USB ERROR	USB ROM error	There is a problem with the USB adapter unit.
BAD USB DEVICE PLEASE CHECK OWNERS MANUAL	Abnormal power source	Appears when the overcurrent protection feature of the system stops supplying power to USB because an incompatible device is connected. Disconnect the device. Then, turn the audio system off, and turn it on again. Do not reconnect the device that caused the error.
UNPLAYABLE FILE	Use of unsupported files	Appears when the files in the USB flash memory device are DRM or an unsupported format. This error message appears for a few seconds, then plays the next song.
NO SONG	No files in USB flash memory device	Appears when the USB flash memory device is empty or there are no MP3, WMA, or AAC files in the USB flash memory device. Save some MP3, WMA, or AAC files in the USB flash memory device.
UNSUPPORTED	Use of unsupported USB flash memory device	Appears when an unsupported device is connected. See page 205 for information on USB flash memory devices. If it appears when the supported device is connected, reconnect the device.

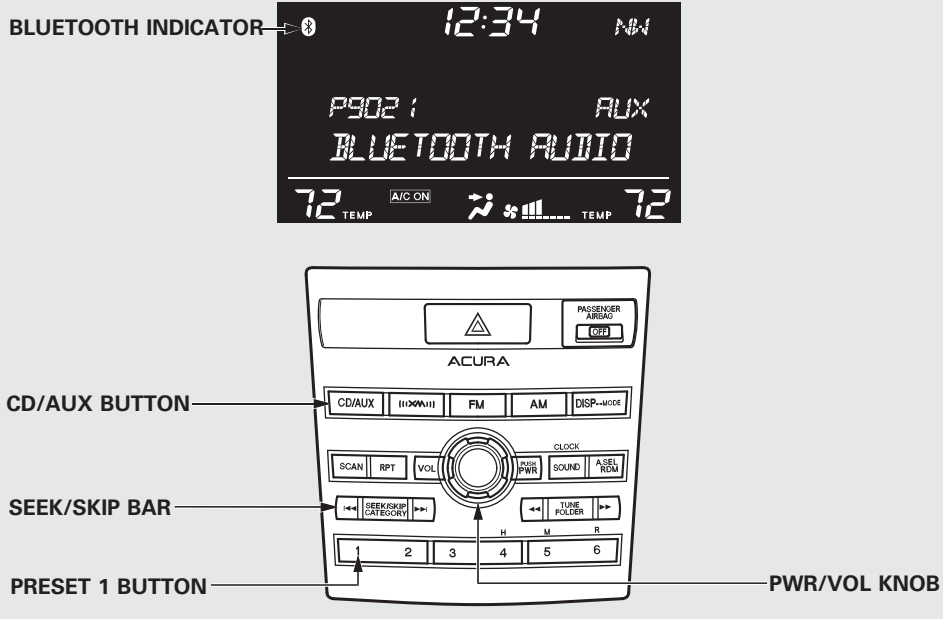

U.S. model is shown.

Your vehicle is equipped with a *Bluetooth*® Audio system, which allows you to listen to streaming audio from your *Bluetooth*® Audio compatible phone. This function is only available on *Bluetooth*® Audio Compatible phones that are paired and linked to the vehicle's *Bluetooth*® HandsFreeLink® (HFL) system (see page 313).

Not all Bluetooth-enabled phones with streaming audio capabilities are compatible with the system. You can find an approved phone by visiting *www.acura.com/handsfreelink,* or by calling the HandsFreeLink® consumer support at 1-888-528-7876. In Canada, visit *www.acura.ca,* or call 1-888-9-ACURA-9.

NOTE: In some states, it may be illegal to perform some data device functions while driving.

To Play *Bluetooth*® Audio Files



Make sure that your phone is paired and linked to the HFL.
Press the CD/AUX button* with the ignition switch in the ACCESSORY (I) or ON (II) position. When the phone is recognized, you will see the *Bluetooth*® Audio message and indicator on the center display, and the system begins to play.

If more than one phone is paired to the HFL system, there will be delay before the system begins to play.

To begin to play the audio files, you may need to operate your phone. If so, follow the phone maker's operating instructions.

*: If an iPod, USB flash memory device, or audio unit connected to the auxiliary input jack was selected at the last mode, you will see iPod, USB, or AUX in the center display. Push the CD/AUX button again to play audio files from your *Bluetooth*® Audio phone.

CONTINUED

In the following conditions, If you cannot see the *Bluetooth*® indicator on the center display.

- The phone is not linked to HFL.
- The phone is not turned on.
- The phone is not in the vehicle.
- Another HFL compatible phone, which is not compatible for *Bluetooth*® Audio, is already connected.

If your *Bluetooth*® Audio compatible phone does not operate as described, make sure it is an Acura approved phone. To find out if your phone is approved, go to *www.acura.com/handsfreelink* (in Canada, *www.acura.ca*), or call the HandsFreeLink® consumer support at (888) 528-7876.

To skip a file

Press the ▶▶| side of the SEEK/SKIP bar to skip forward, and press the |◀◀ side to skip backward to the beginning of the current file. Push the |◀◀ side again to skip to the previous file.

To pause or resume a file

The resume/pause mode can stop playing a file temporarily. Press the preset 1 button to pause and press it again to resume a file.

NOTE: The pause function may not be available on some phone devices.

To switch to HFL mode

If you receive a call when the *Bluetooth*® Audio is playing, press the Talk button on the steering wheel. The display switches to the HFL mode (see page 309).

After ending the call, press the HFL Back button to go back to the *Bluetooth*® Audio mode.

If you receive a call while the system is in the pause mode, the mode will be canceled and *Bluetooth*® Audio will continue to play.

To turn off the Bluetooth® Audio mode

Select any other audio mode by pressing a button: FM, AM, ((XM)) or CD/AUX (if a disc is loaded), on the audio control panel or press the mode button on the steering wheel repeatedly to select another audio mode. If iPod or USB flash memory device is connected to the USB adapter cable or audio unit is connected to AUX jack, pressing the CD/AUX button also changes a mode.

Switching to another mode pauses the music playing from your phone.

As required by the FCC:
This device complies with Part 15 of the FCC rules. Operation is subject to the following two conditions: (1) This device may not cause harmful interference, and (2) this device must accept any interference received, including interference that may cause undesired operation.

Changes or modifications not expressly approved by the party responsible for compliance could void the user's authority to operate the equipment.

This device complies with Industry Canada Standard RSS-210.
Operation is subject to the following two conditions: (1) this device may not cause interference, and (2) this device must accept any interference that may cause undesired operation of the device.

Interface Dial

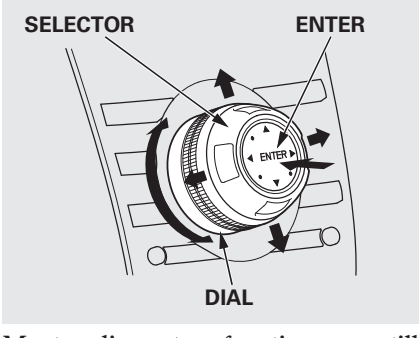

Most audio system functions can still be controlled by standard buttons, bars, and knob, but some functions can only be accessed using the interface dial. The interface dial has two parts, a knob and a selector.

When you operate the audio system with the interface dial, press the AUDIO button on the control panel to display the audio control on the navigation display.

The knob turns left and right. Use it to make selections or adjustments to a list or menu on the screen.

The selector can be pushed left, right, up, down, and in. Use the selector to scroll through lists, to select menus, and to highlight menu items. When you make a selection, push the center of the selector (ENTER) to go to that selection.

You can operate the audio system with the control buttons on the CD changer unit without displaying the audio control display on the navigation display. The audio setting will be shown on the upper display.

Voice Control System

The audio system for your vehicle can also be operated by voice control. See the navigation system manual for complete details.

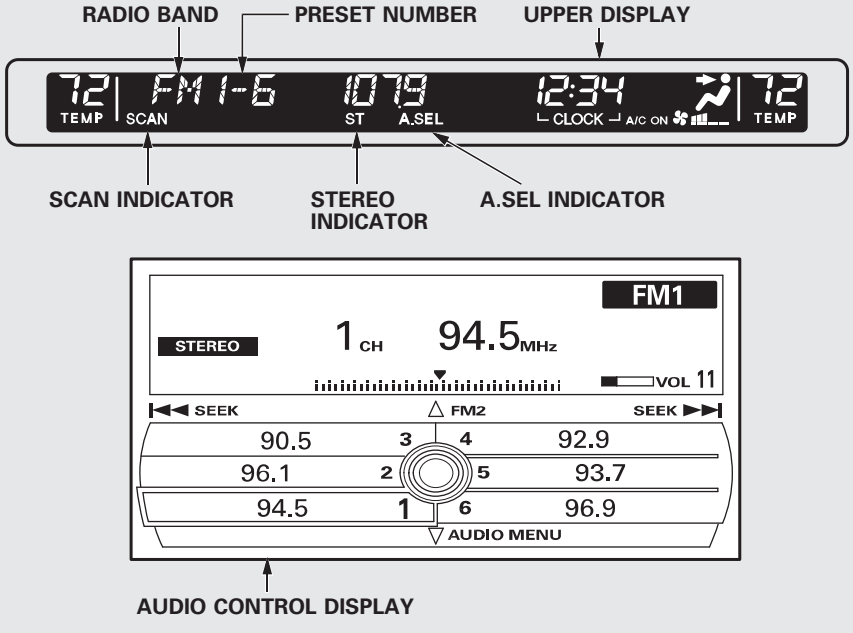

U.S. model is shown.

CONTINUED

U.S. model is shown.

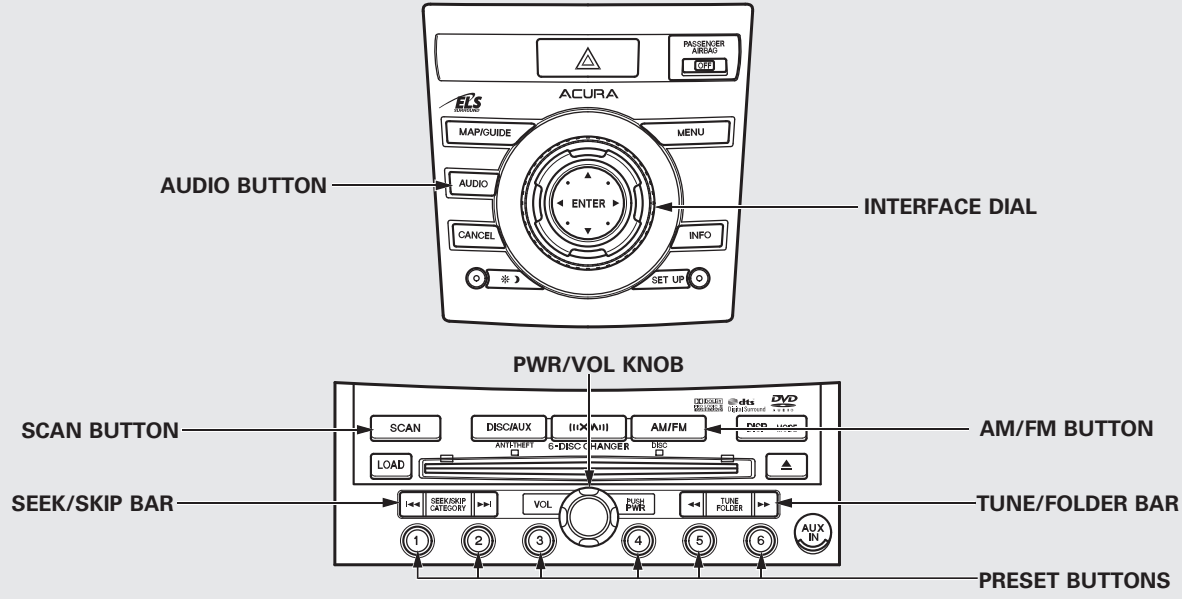

To Play the Radio
The ignition switch must be in the ACCESSORY (I) or the ON (II) position. Press the AUDIO button to view the audio control display. Turn the system on by pressing the PWR/VOL knob or the AM/FM button. Adjust the volume by turning the PWR/VOL knob.

The band and frequency the radio was last tuned to are shown on the upper display. To change bands, press the AM/FM button. You can also change bands with the interface dial. Press the AUDIO button to view the audio control display and the band changes to FM1, FM2, or AM each time you push the selector up. On the FM bands, “STEREO” will be shown on the audio control display. “ST” will also appear on the upper display if the station is broadcasting in stereo. Stereo reproduction on AM is not available.

XM Radio information is available on page 228.

To Select a Station
You can use any of five methods to find radio stations on the selected band: TUNE, SEEK, SCAN, the preset buttons or icons, and AUTO SELECT.

TUNE – Use the TUNE/FOLDER bar to tune the radio to a desired frequency. Press the ►► side of the bar to tune to a higher frequency, and the ◄◄ side of the bar to tune to a lower frequency.

If you press and hold the ◄◄ or ►► side of the bar, the frequency will begin to change rapidly. It will stop when you release it.

CONTINUED

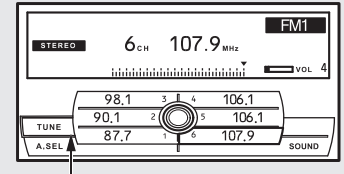

TUNE ICON

To tune with the interface dial, press the AUDIO button to view the audio control display, then push the selector down, and turn the dial to TUNE. Then press ENTER on the selector, and turn the dial to the desired frequency. To exit the TUNE mode, press ENTER again.

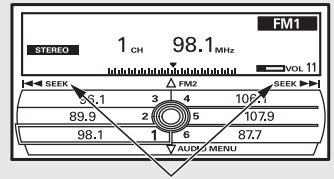

SEEK ICONS

SEEK – The SEEK function searches up and down from the current frequency to find a station with a strong signal. To activate it, press the I◄◄ or ►►I side of the SEEK/SKIP bar, then release it.

To activate the seek function with the interface dial, press the AUDIO button to view the audio control display, then push the selector on the interface dial to the right or left.

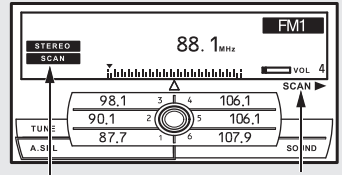

SCAN INDICATOR

SCAN ICON

SCAN – The SCAN function samples all stations with strong signals on the selected band. To activate it, press the SCAN button, then release it. You will see “SCAN” on the upper display.

To activate the scan function with the interface dial, press the AUDIO button to view the audio control display, then push down the selector on the interface dial, and push the selector to the right. You will see “SCAN” on the audio control display.

When it finds a strong signal, it will stop and play that station for about 10 seconds. If you do nothing, the system will then scan for the next strong station and play it for 10 seconds. When it plays a station that you want to listen to, press the SCAN button again, or push the interface selector to the right again.

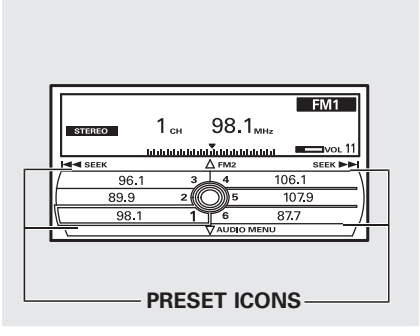

Preset – Each preset button/icon can store one frequency on AM and two frequencies on FM. To view the preset icons on the audio control display, push the AUDIO button.

1. Select the desired band, AM or FM. FM1 and FM2 let you store two sets of FM frequencies with the preset buttons (on-screen icons).
2. Use the TUNE, SEEK, or SCAN function to tune the radio to a desired station.
3. Pick a preset number (1 – 6), you want for that station. Press the preset button, and hold it until you hear a beep.

CONTINUED

To store the frequency on a preset icon, turn the interface dial to select a desired preset icon. The selected preset icon will be highlighted. Press and hold ENTER on the selector for more than 2 seconds to store the frequency.

4. Repeat steps 1 through 3 to store a total of six stations on AM and twelve stations on FM.

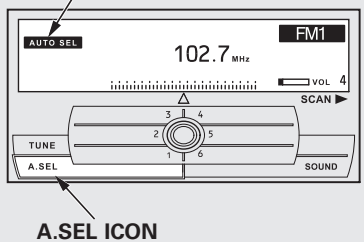

AUTO SELECT – If you are traveling and can no longer receive your preset stations, you can use the auto select feature to find stations in the local area.

To activate AUTO SELECT, press the AUDIO button to view the audio control display. Push the interface selector down to scroll down the display, turn the knob to A.SEL, then press ENTER on the interface selector. You will see “AUTO SEL” flashing in the audio control display, and “A.SEL” on the upper display. Then, the system goes into scan mode for several seconds.

The system stores the frequencies of six AM and twelve FM stations in the preset buttons.

You will see “0” displayed if auto select cannot find a strong station for every preset button.

If you do not like the stations auto select has stored, you can store other frequencies on the preset buttons (icons) as previously described.

To turn off auto select, press ENTER on the interface selector again. This restores the presets you originally set.

Radio Frequencies and Reception
For information on AM/FM radio frequencies and reception, see page 287.

Adjusting the Sound
For information, see page 224.

Adjusting the Sound
BASS, TREBLE, BALANCE, and FADER are each adjustable. You can also adjust the strength of the sound coming from the center and subwoofer speakers. In addition, you can set the Dolby PL (ProLogic) II and Speed-sensitive volume compensation (SVC).

To adjust each mode, press the AUDIO button to view the audio control display, push the interface selector down, and turn the interface dial to SOUND. Then press ENTER on the selector.

Select the mode you want to adjust by pushing the interface selector up or down, or by turning the interface dial.

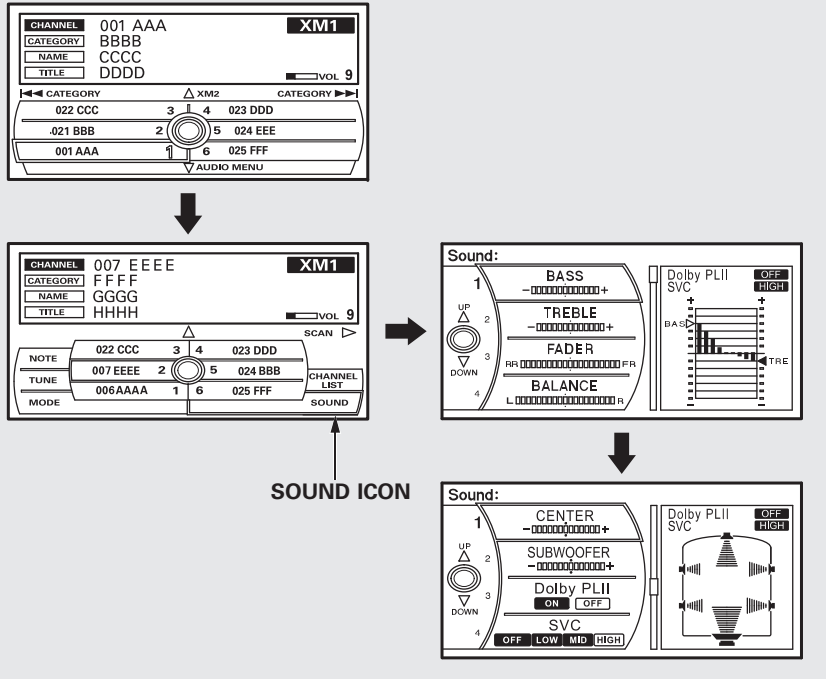

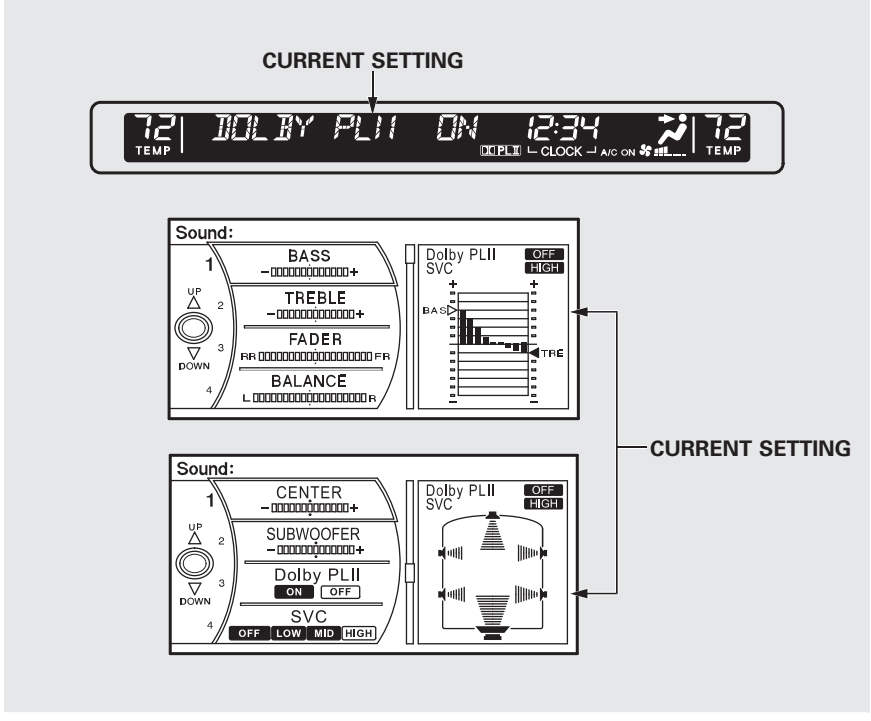

The current setting is also shown on the upper display.

The system will automatically return the display to the selected audio mode about 10 seconds after you stop adjusting a mode.

BASS/TREBLE – To adjust bass and treble, select BASS or TREBLE, and press ENTER on the interface selector. The current setting is shown on the audio control display. Turn the interface dial to the desired level (–6 to +6), and enter your selection by pressing ENTER.

CONTINUED

FADER/BALANCE – These modes adjust the strength of the sound coming from each speaker. Fader adjusts the front-to-back strength, while balance adjusts the side-to-side strength. To adjust fader and balance, select FADER or BALANCE, then press ENTER on the interface selector. The current setting is shown on the audio control display. Turn the interface dial to the desired level (fader: F9 to R9, balance: L9 to R9), and enter your selection by pressing ENTER. To equalize the fader or balance, turn the interface dial until the readings on the sound grid come to the center of the adjustment bar.

CENTER/SUBWOOFER – To adjust the strength of the sound from the center or subwoofer speaker, select it and press ENTER on the interface selector. Turn the interface dial to the desired level (– 6 to + 6), and enter your selection by pressing ENTER. The current setting is shown on the audio control display. Even if the adjustment level reaches – 6, the sub woofer is not turned off.

Dolby PL (Prologic) II – Dolby PL (Prologic) II signal processing creates multi-channel surround sound from the audio signal recorded with 2 channel stereo sources. Dolby prologic II can only be activated when listening to CD (CD-DA, MP3/WMA), XM radio, and AUX. When it activates, “DPL II” is shown on the upper display.

To set this feature on or off, select Dolby PL II, and press ENTER on the interface selector. Rotate the interface dial to ON or OFF, and press ENTER.

Manufactured under license from Dolby Laboratories. Dolby, Pro Logic, MLP Lossless and the double-D symbol are trademarks of Dolby Laboratories.

Speed-sensitive volume compensation (SVC) – The SVC mode controls the volume based on vehicle speed. The faster you go, the louder the audio volume becomes. As you slow down, the audio volume decreases.

The SVC has four modes: OFF, LOW, MID, and HIGH.

Turn the interface dial to the desired setting, and enter your selection by pressing ENTER.

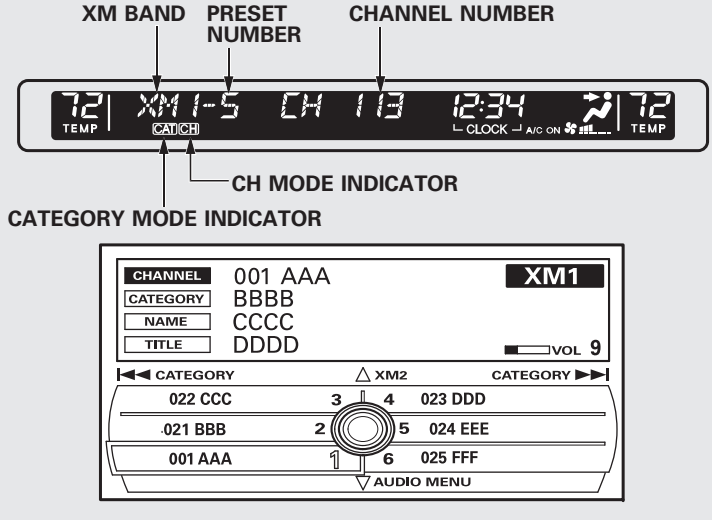

U.S. model is shown.

U.S. model is shown.

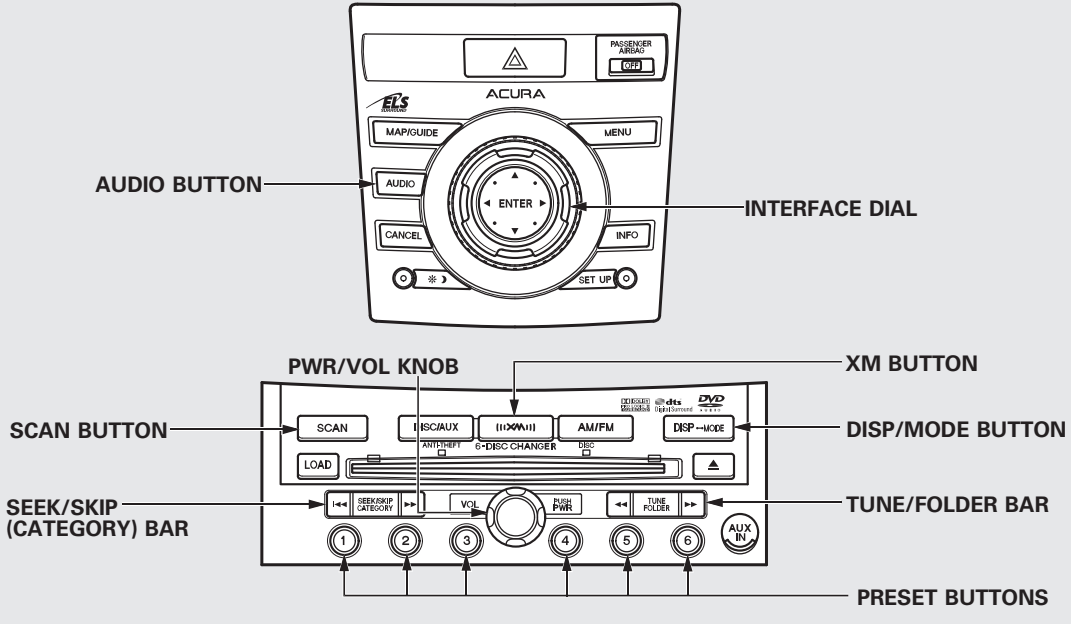

CONTINUED

Playing the XM® Radio (Models with navigation system)

Your vehicle is capable of receiving XM® Radio anywhere in the United States and Canada, except Hawaii, Alaska, and Puerto Rico. XM is a registered trademark of Sirius XM Radio®, Inc. and XM CANADA® is a registered business name of Canadian Satellite Radio Inc.

XM Radio receives signals from two satellites to produce clear, high-quality digital reception. It offers many channels in several categories. Along with a large selection of different types of music, XM Radio also allows you to view channel and category selections in the upper display and the audio control display.

Operating the XM Radio
To listen to the XM Radio, turn the ignition switch to the ACCESSORY (I) or ON (II) position. Push the PWR/VOL knob to turn on the audio system, and press the «XM» button. To view the audio control display, press the AUDIO button. Adjust the volume turning the PWR/VOL knob. The last channel you listened to will show on the upper display.

DISP – Each time you press and release the DISP/MODE button, the upper display changes in the following sequence: Channel name, category, artist name, and music title.

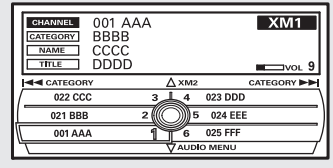

MODE – To switch between the category mode and channel mode, press and hold the DISP/MODE button until the mode changes. A “CH” (channel) or “CAT” (category) mode indicator appears on the upper display.

To Select a Channel
When in the satellite radio mode, you can use any of four methods to find channels: TUNE, SEEK/SKIP (CATEGORY), SCAN, and the preset icons.

You can also switch between the category mode and channel mode on the audio control display. Press the AUDIO button to view the display, then push down the selector on the interface dial. Rotate the interface dial to select the mode. Press ENTER on the selector to enter your selection.

TUNE – Press the TUNE/FOLDER bar to change channel selections. Press the ►► side of the bar to tune to higher numbered channels, and the ◄◄ side of the bar to tune to lower numbered channels. In the category mode, you can only select channels within that category.

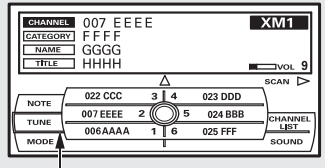

TUNE ICON

You can also change channel selections on the audio control display. Press the AUDIO button to view the display, then push down the selector on the interface dial. Rotate the interface dial to select TUNE. Press ENTER on the selector to enter your selection. Rotate the interface knob to the desired channel. In the category mode, you can only select channels within that category.

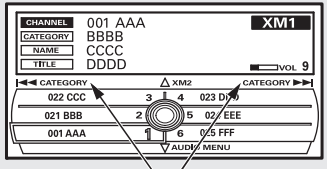

SEEK/SKIP (CATEGORY) ICON

SEEK/SKIP (CATEGORY) – Press either side of the SEEK/SKIP (CATEGORY) bar (|◄◄ or ►►|) to select another category.

You can also change the category on the audio control display. Press the AUDIO button to view the display, then push the selector on the interface dial to the right side or left side to select another category.

CONTINUED

SCAN − The scan function gives you a sampling of all channels while in the channel mode. In the category mode, only the channels within that category are scanned. To activate scan, press the SCAN button. The system plays each channel in numerical order for a few seconds, then selects the next channel. When you hear a channel you want to continue listening to, press the button again.

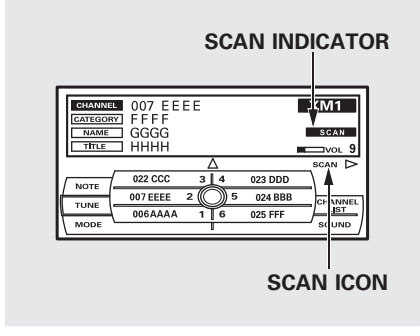

You can also scan the channels on the audio control display. Press the AUDIO button to view the display, then push down the selector on the interface dial. Push the selector to the right to activate scan feature.

Preset − You can store up to 12 preset channels using the preset buttons/icons. Each button/icon stores one channel from the XM1 band and one channel from the XM2 band.

To store a channel:

1. Press the «XM» button. To view the audio control display, press the AUDIO button. Either XM1 or XM2 will be shown on the display.
2. Use the tune, seek, or scan function to tune to a desired channel.

   In category mode, only channels within that category can be selected. In channel mode, all channels can be selected.

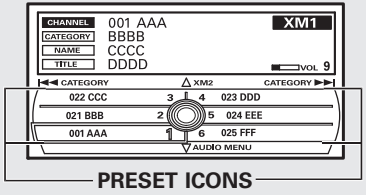

3. Pick a preset number for the channel you want to store. Press and hold the appropriate button until you hear a beep.

   To store the channel on a preset icon, rotate the interface dial to select a desired preset icon. The selected preset icon will be highlighted. Press and hold ENTER on the selector for more than 2 seconds to store the channel.

4. Repeat steps 2 and 3 to store the first six channels.
5. Press the «XM» button again. The other XM band will be shown. Store the next six channels by repeating steps 2 and 3.

Once a channel is stored, press and release the proper preset button to tune to it.

Adjusting the Sound
For information, see page 224.

XM Radio Reception
For information, see page 235.

CONTINUED

XM Radio Display Messages

"**LOADING**" – XM is loading the audio or program information.

"**OFF AIR**" – The channel currently selected is no longer broadcasting.

"**UPDATING**" – The encryption code is being updated. Wait until the encryption code is fully updated. Channels 0 and 1 should still work normally.

"**NO SIGNAL**" – The signal is currently too weak. Move the vehicle to an area away from tall buildings, and with an unobstructed view of the southern horizon.

"- - - -" – The selected channel number does not exist, or is not part of your subscription, or this channel has no artist or title information at this time.

"**ANTENNA**" – There is a problem with the XM antenna. Please consult your dealer.

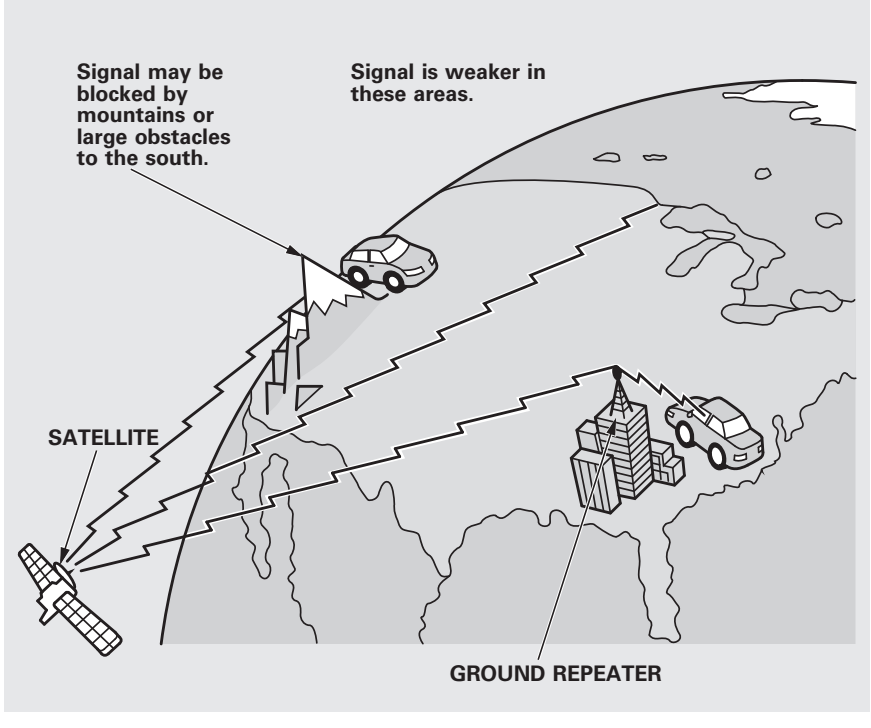

Satellite Radio Signals

Satellite radio receives signals from two satellites to produce clear, high-quality digital reception. It offers many channels in several categories. Along with a large selection of different types of music, satellite radio also allows you to view channel and category selections in the audio display.

The XM satellites are in orbit over the equator; therefore, objects south of the vehicle may cause satellite reception interruptions. To help compensate for this, ground-based repeaters are placed in major metropolitan areas.

Satellite signals are more likely to be blocked by tall buildings and mountains the farther north you travel from the equator.

CONTINUED

Depending on where you drive, you may experience reception problems. Interference can be caused by any of these conditions:

- Driving on the north side of an east/west mountain road.
- Driving on the north side of a large commercial truck on an east/west road.
- Driving in tunnels.
- Driving on a road beside a vertical wall, steep cliff, or hill to the south of you.
- Driving on the lower level of a multi-tiered road.
- Driving on a single lane road alongside dense trees taller than 50 ft. (15 m) to the south of you.

There may also be other geographic situations or structures that could affect satellite radio reception.

As required by the FCC:
Changes or modifications not expressly approved by the party responsible for compliance could void the user's authority to operate the equipment.

This device complies with Industry Canada Standard RSS-210.
Operation is subject to the following two conditions: (1) this device may not cause interference, and (2) this device must accept any interference that may cause undesired operation of the device.

Note Function
If equipped.
This function stores the sound content played on the selected XM radio station with the channel, category, name, and title information.

To activate this function, press and hold the «XM» button for about 2 seconds while a song or passage which you want to store is playing.

The function records for about 10 seconds, enough for you to identify the selection when you play it back.

Once you store the recorded sound file, you can replay it and confirm the information. The system can store up to 30 sound files. If you continue to store more information, the oldest one will be deleted each time you add new information.

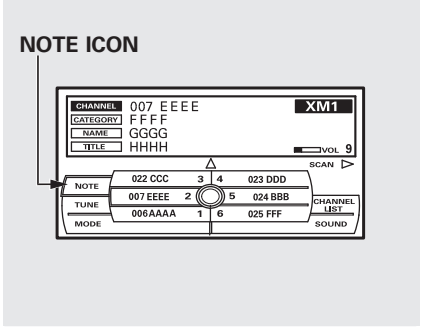

To replay and see the stored information, press the AUDIO button to select the audio control display.

Push down the selector knob to display the audio menu. Turn the selector knob to select NOTE, then press ENTER.

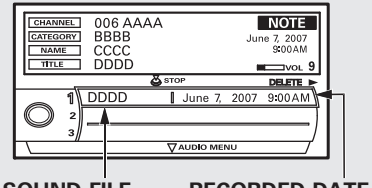

Turn the selector knob to select a sound file, then press ENTER. The audio control display shows the category, name and title information of the selected file.

CONTINUED

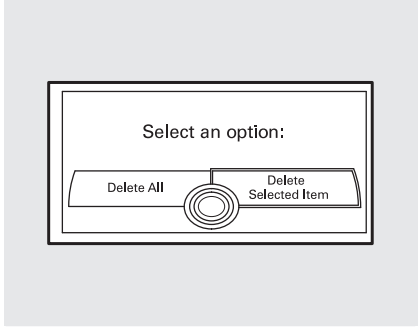

To delete a file, select it by turning the selector knob, then push it to the right. Select “Delete All” or “Delete Selected Item,” then press ENTER.

Receiving Radio Service

If your XM Radio service has expired or you purchased your vehicle from a previous owner, you can listen to a sampling of the broadcasts available on XM radio. With the ignition switch in the ACCESSORY (I) or the ON (II) position, push the PWR/VOL knob to turn on the audio system, and press the ((XM)) button. A variety of music types and styles will play.

If you decide to purchase XM Radio service, contact XM Radio at *www.xmradio.com,* or at 1-800-852-9696. In Canada, contact XM CANADA® at *www.xmradio.ca,* or at 1-877-209-0079. You will need to give them your radio I. D. number and your credit card number. To get your radio I.D. number, turn the TUNE knob until “0” appears in the display. Your I.D. will appear in the display.

After you've registered with XM Radio, keep your audio system in the satellite radio mode while you wait for activation. This should take about 30 minutes.

While waiting for activation, make sure your vehicle remains in an open area with good reception. Once your audio system is activated, “CAT” or “CH” will appear in the upper display, and you'll be able to listen to XM Radio broadcasts. XM Radio will continue to send an activation signal to your vehicle for at least 12 hours from the activation request. If the service has not been activated after 36 hours, contact XM Radio. In Canada, contact XM CANADA®.

Normal mode

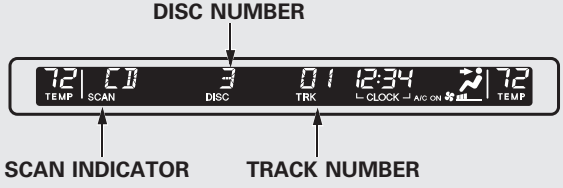

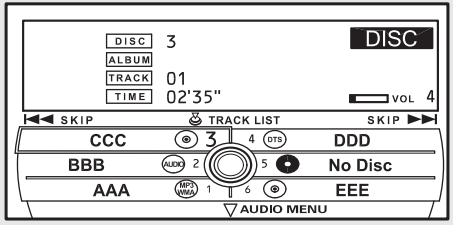

MP3/WMA mode

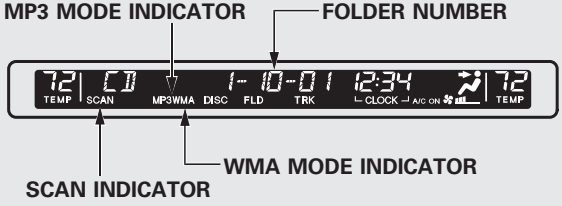

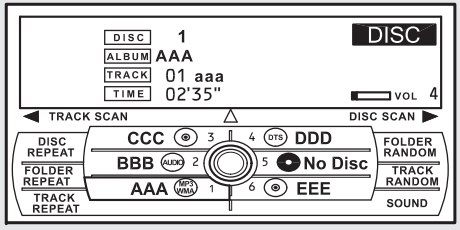

U.S. model is shown.

CONTINUED

U.S. model is shown.

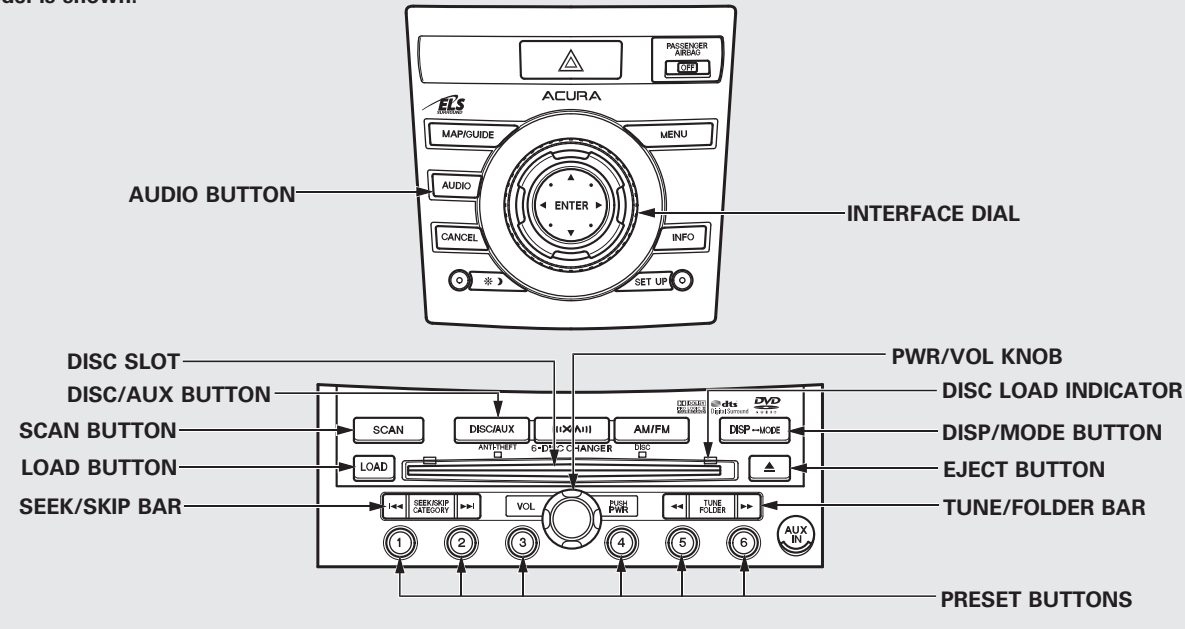

Your vehicle's audio system has an in-dash disc changer with the same controls used for the radio. To operate the disc changer, the ignition switch must be in the ACCESSORY (I) or the ON (II) position.

The disc changer can play these disc formats:

- CD (CD-DA)
- CD-R/RW
- DVD-A

The disc packages or jackets should have one of these marks.



The changer can also play MP3 or WMA format (see page 245).

DVD-A discs not meeting DVD verification standards may not be playable.

The changer cannot play DVD-V or DVD-R/RW formats.

Some CD-DA and CD-ROM mixed discs are not playable.

You cannot load and play 3-inch (8-cm) discs in this system.

NOTICE

Do not use discs with adhesive labels. The label can curl up and cause the disc to jam in the unit.

CONTINUED



Manufactured under license under U.S. Patent #'s: 5,451,942; 5,956,674; 5,974,380; 5,978,762; 6,487,535 & other U.S. and worldwide patents issued & pending. DTS and DTS Digital Surround are registered trademarks and the DTS logos and Symbol are trademarks of DTS, Inc. © 1996-2007 DTS, Inc. All Rights Reserved.

Loading Discs
To load multiple discs in one operation:

1. Press and hold the LOAD button on the changer unit until you hear a beep. You will see “BUSY” on the upper display, and the disc load indicator turns red and starts blinking.
2. Insert the disc into the disc slot when the disc load indicator turns green and “LOAD” appears in the upper display at the same time. Insert it only halfway; the drive will pull it in the rest of the way. You will see “BUSY” on the upper display, and the disc load indicator turns red again and blinks as the CD is loaded.
3. When the disc load indicator turns green and “LOAD” appears on the upper display again, insert the next CD in the slot. Do not try to insert a disc until “LOAD” appears. You could damage the audio unit.
4. Repeat steps 1 through 3 until all six positions are loaded. If you are not loading all six positions, press the LOAD button again after the last CD has loaded. “DISC READ” appears on the upper display, then the system begins playing the last loaded.

If you stop loading discs before all six positions are filled, the system will wait for 10 seconds, stop the load operation, and begin playing the last disc loaded.

To load a single disc:

1. Press and release the LOAD button on the changer unit. You will see “BUSY” on the upper display, and the disc load indicator turns red and starts blinking.

2. Insert a disc into the disc slot when the disc load indicator turns green, and “LOAD” appears on the upper display at the same time. Insert the disc only about halfway; the drive will pull it in the rest of the way. You will see the disc number blinking on the upper display, and the disc load indicator turns red again and blinks as the CD is loaded.

   Do not try to insert a disc until “LOAD” appears. You could damage the audio unit.

3. You will see “DISC READ” on the upper display, then the system begins to play the CD.

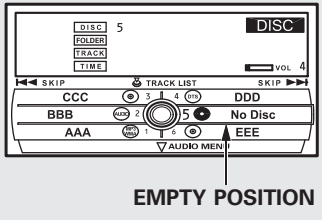

You can load a CD into an empty position while a CD is playing. Press the AUDIO button to view the audio control display. Select the empty position (“No Disc” is shown on the audio control display) by rotating the interface dial. Then press ENTER on the selector to enter your selection. The current CD stops playing and starts the loading sequence. The CD just loaded will play.

You can also select the empty position by pressing the appropriate preset button.

You can load a disc(s) in any mode (AM, FM, XM, or AUX) if you do not select an empty position.

You cannot select the empty position if there is no disc in the changer.

CONTINUED

To Play a Disc

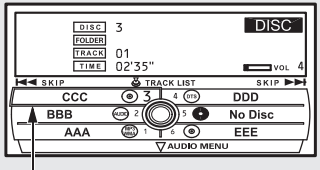

CURRENT DISC

Select the changer by pressing the DISC/AUX button. You will see the "CD" on the upper display. The system will begin playing the last selected CD in the CD changer.

If you want to see the list of the discs in the CD changer, press the AUDIO button to view the audio control display. You will see the current disc position highlighted.

When playing a CD (CD-DA), the audio control display shows disc number, album name, track number, and elapsed time. When playing a CD without this information, the number of the disc and track playing and the elapsed time are shown on the audio control display.

When the system reaches the end of the disc, it will advance to the beginning of the first track/file (in MP3/WMA mode) on the next disc, then play that track/file.

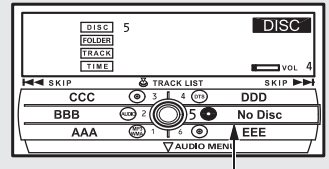

EMPTY POSITION

To select a disc, press an appropriate preset button (1 – 6), or select an appropriate preset icon by rotating the interface dial, then press ENTER on the interface selector. If you select an empty position ("No Disc" is shown) in the CD changer, the system will load a CD into the empty slot (see page 243).

Playing an MP3/WMA Disc
The CD changer can also play CD-Rs and CD-RWs compressed in MP3 and WMA format. When playing a disc in MP3 or WMA, you will see “MP3” or “WMA” on the upper display. A disc can support more than 99 folders, and each folder can hold up to 255 playable files.

When there are more than 99 folders on a disc, the upper display only shows two digits.

NOTE: If a file on an MP3 or WMA disc is protected by digital rights management (DRM), the audio unit displays FORMAT, and then skips to the next file.

When playing a CD compressed in MP3/WMA format, the audio control display shows disc number, folder name, file number, and elapsed time. When playing a CD without this information, the disc number, track number, and the elapsed time are shown on the audio control display.

If the disc has a complex structure, it will take a while to read the disc before the system begins to play it.

Depending on the software the files were made with, it may not be possible to play some files, or display some text data.

CONTINUED

To Change or Select Tracks/Files
While a disc is playing you can use the SEEK/SKIP bar to select passages and change tracks (files in MP3/WMA mode).

In MP3/WMA mode, use the TUNE/FOLDER bar to select folders on the disc, and use the SEEK/SKIP bar to change files.

SEEK/SKIP – Each time you press and release the ►►I side of the SEEK/SKIP bar, the system skips forward to the beginning of the next track (file in MP3/WMA mode). Press and release the I◄◄ side of the bar to skip backward to the beginning of the current track/file. Press it again to skip to the beginning of the previous track/file.

To move rapidly within a track/file, press and hold the I◄◄ or ►►I side of the SEEK/SKIP bar.

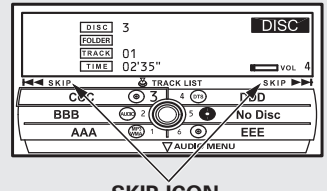

SKIP ICON

You can also change tracks/files on the audio control display. Press the AUDIO button to view the display, then push the selector on the interface dial to the right to skip forward to the beginning of the next track/file. Push the selector left to skip backward to the beginning of the current track/file. Press it again to skip to the beginning of the previous track/file.

In MP3/WMA mode

FOLDER SELECTION – To select a different folder, press and release the ►► side of the TUNE/FOLDER bar to move to the beginning of the next folder. Press and release the ◄◄ side of the bar to move to the beginning of the previous folder.

Using a Track List

You can also select a track/file (in MP3/WMA) directly from the track list on the audio control display. Press the AUDIO button to view the display, then rotate the interface dial to the current disc. Press ENTER on the selector to view the track list on the display. The current disc is highlighted.

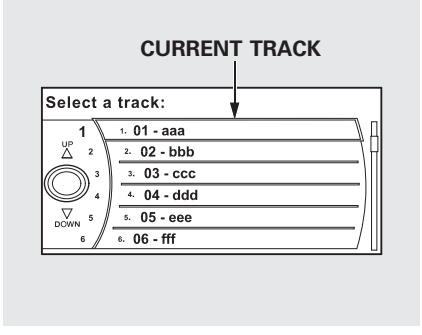

To select a track, rotate the interface dial or push up and down the selector on the interface dial. Then press ENTER on the selector to enter your selection.

CONTINUED

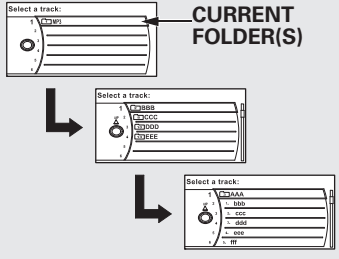

In MP3/WMA mode
You will see a list of the folder(s) on the current disc. To select a folder (s), rotate the interface dial or push up and down the selector on the interface dial. Then press ENTER on the selector to enter your selection. If the disc has several folders, the list advances to the next folder. When the list of the files is displayed, select it by rotating the knob, or pushing the selector up and down.

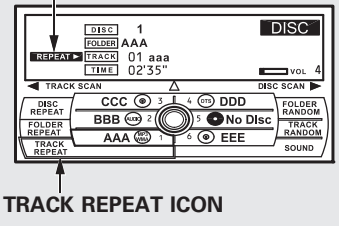

REPEAT – This feature, when activated, continuously replays the current track (file in MP3/WMA mode). To activate it, press the AUDIO button to view the audio control display, then push down the selector on the interface dial. Rotate the interface dial to select track repeat. Press ENTER on the selector to enter your selection.

You will see “REPEAT” next to the TRACK icon on the audio control display. To turn off this feature, select track repeat as previously described, then press ENTER again.

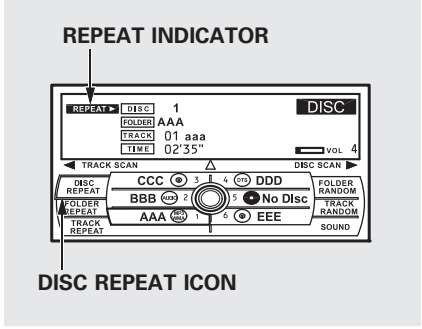

DISC REPEAT – This feature, when activated, continuously replays the current CD. Press the AUDIO button to view the audio control display, then push down the selector on the interface dial. Rotate the interface dial to select DISC REPEAT. Press ENTER on the selector to enter your selection. You will see “REPEAT” next to the DISC icon on the audio control display. To turn off this feature, select the DISC REPEAT, then press ENTER again.

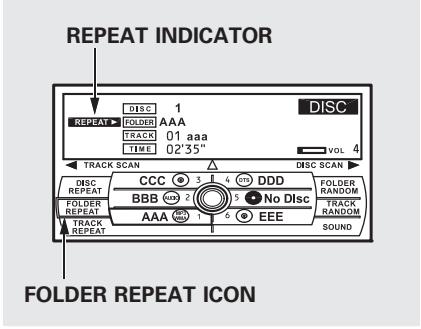

In MP3/WMA mode

FOLDER REPEAT – This feature, when activated, replays all the files in the selected folder in the order they are compressed in MP3/WMA. To activate folder repeat, press the AUDIO button to view the audio control display, then push down the selector on the interface dial. Rotate the interface dial to select FOLDER REPEAT. Press ENTER on the selector to enter your selection. You will see “FOLDER REPEAT” on the audio control display. To turn off this feature, select FOLDER REPEAT, then press ENTER again.

SCAN – The scan function samples all tracks (files in a folder in MP3 or WMA mode) on the disc in the order they are recorded on the disc. To activate scan, press and release the SCAN button. You will also see “SCAN” and the track/file number blinking on the upper display. To hear the rest of the track/file, press and hold the SCAN button for more than 2 seconds. If you don't, the system advances to the next track/file, plays about 10 seconds of it, and continues through the rest of the track/file the same way. When the system finishes scanning all the tracks/files on the current disc, the system returns to the track/file it first started scanning with, scan is canceled, and the system begins to play that track/file normally.

CONTINUED

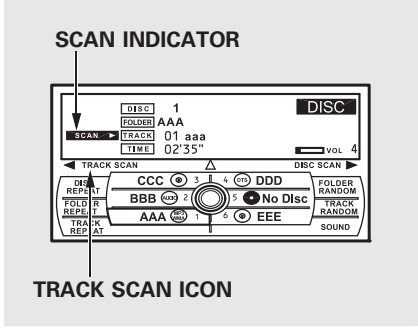

To activate the scan feature on the audio control display, press the AUDIO button to view the display. Push down the selector on the interface dial, then push the selector to the left. You will see “SCAN” next to the TRACK icon on the audio control display. To turn off this feature, push the selector to the left again within 10 seconds.

In MP3/WMA mode

FOLDER SCAN – The folder scan function samples the first file of each folder on the current disc in the order they are compressed in MP3/WMA. To activate this feature, press the SCAN button twice. The first file of each folder plays for about 10 seconds. You will see “FOLDER SCAN” next to disc number on the audio control display. You will also see “SCAN” and the folder number blinking on the upper display. To hear the rest of the file in the folder currently scanning, press and hold the SCAN button for more than 2 seconds.

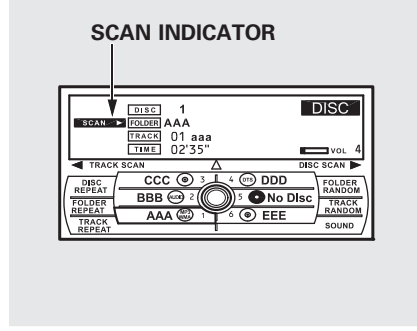

If you don't, the system advances to the next folder, plays about 10 seconds of it, and continues through the rest of the folders the same way.

DISC SCAN – The disc scan function samples the first track/file (in MP3/WMA mode) on each disc within the changer in numerical order. To activate this feature, press the SCAN button twice. In the MP3/WMA mode, press the SCAN button three times. The first track/file on each disc plays for about 10 seconds. You will see “SCAN” next to the DISC icon on the audio control display. You will also see “SCAN” and the disc number blinking on the upper display. To hear the rest of the track/file on the disc currently scanning, press and hold the SCAN button for more than 2 seconds.

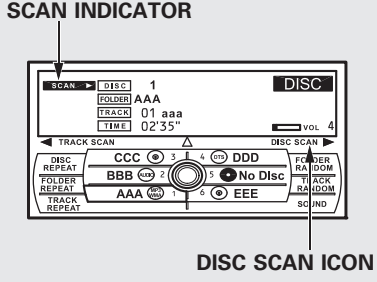

If you don't, the system advances to the next disc, plays about 10 seconds of it, and continues through the rest of the discs the same way.

Each time you press and release the SCAN button, the mode changes from scan, to folder scan, to disc scan, then to normal play.

RANDOM (Random within a disc) – This feature plays the tracks (all files in each folder in MP3/WMA mode) within a disc in random order. To activate random play, press the AUDIO button to view the audio control display, then push down the selector on the interface dial. Rotate the interface dial to select TRACK RANDOM. Press ENTER on the selector to enter your selection.

CONTINUED

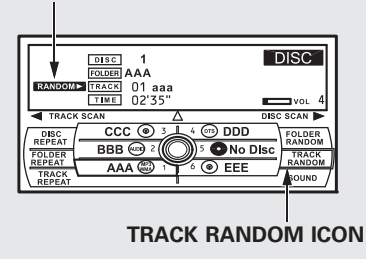

You will see “RANDOM” next to the TRACK/FILE icon on the audio display. To turn off this feature, select TRACK RANDOM, then press ENTER again.

In MP3/WMA mode

FOLDER RANDOM – This feature plays the files within a folder in random order, rather than in the order they are compressed in MP3/WMA. To activate folder random play, press the AUDIO button to view the audio control display, then push down the selector on the interface dial. Rotate the interface dial to select the FOLDER RANDOM. Press ENTER on the selector to enter your selection.

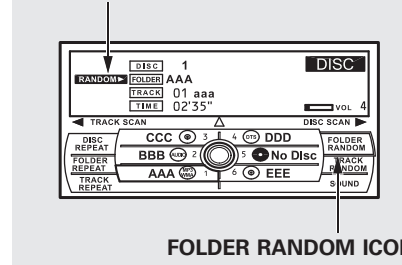

You will see “FOLDER RANDOM” on the audio control display. To turn off this feature, select FOLDER RANDOM, then press ENTER again.

Playing a DVD-A Disc
You can play a DVD-A disc in the CD changer. The disc controls are same as previously described.

To Pause a Disc
To pause a disc, press the preset button which corresponds to the current disc. To play the disc again, press the preset button again.

To Stop Playing a Disc
If you turn the system off while a disc is playing, either with the PWR/VOL knob or by turning off the ignition switch, the disc will stay in the drive. When you turn the system back on, the disc will begin playing where it left off.

To take the system out of disc mode, press the AM/FM, or DISC/AUX, or «XM» button to switch to the radio, or satellite radio, or auxiliary input while a disc is playing. When you return to disc mode by pressing the DISC/AUX button, play will continue at the same point that it left off.

Removing Discs from the Changer
To remove the disc that is currently playing, press and release the eject (⏏) button. You will see "EJECT" on the upper display. When you remove the disc from the slot, the system begins the load sequence so you can load another disc in that position. If you do not load another disc within 10 seconds, the system selects the previous mode (AM, FM1, FM2, or XM Radio).

If you do not remove the disc from the slot, the system will reload the disc after 10 seconds and put the CD changer in pause mode. To begin playing the disc, press the DISC/AUX button.

CONTINUED

To remove a different disc from the changer, first select it by pressing the corresponding number on the preset button or turning the interface knob, and pressing ENTER on the interface selector. When that disc begins playing, press the eject button.

Press and hold the eject button until you hear a beep to remove all the discs from the changer.

You can also eject discs when the ignition switch is off by pressing the eject button. The disc that was last selected is ejected first. You can eject the rest of the discs one at a time.

Protecting Discs
For information on how to handle and protect compact discs, see page 257.

Disc Changer Error Messages
For information, see page 255.

Adjusting the Sound
For information, see page 224.

If you see an error message in the display while playing a CD, find the cause in the chart to the right. If you cannot clear the error message, take the vehicle to your dealer.

Error Message	Cause	Solution
CHECK DISC	FOCUS Error	Press the EJECT button, and pull out the disc. Check if it is inserted correctly in the disc changer. Make sure the disc is not scratched or damaged. For more information, see page 258.
MECH ERROR	Mechanical Error	Press the EJECT button, and pull out the disc. Check the disc for damage or deformation. For more information, see page 258. If the disc cannot be pulled out, or the error message does not disappear after the disc is ejected, see your dealer.
HOT	High Temperature	Will disappear when the temperature returns to normal.
CHECK DISC LOAD	Check Disc	Press the EJECT button, and pull out the disc. Make sure a playable disc is in the CD changer (see page 241).
CHANGER ERROR	Check Disc and Changer Error	Press the EJECT button, and pull out the disc. Check the disc for damage or deformation. For more information, see page 258. If the disc cannot be pulled out, or the error message does not disappear after the disc is ejected, see your dealer.

CONTINUED

Disc Changer Error Messages (Models with navigation system)

The chart on the right explains the error messages you may see in the display while playing a disc.

If you see an error message in the display while playing a disc, press the eject button. After ejecting the disc, check it for damage or deformation. If there is no damage, insert the disc again.
For the additional information on damaged discs, see page 258.

The audio system will try to play the disc. If there is still a problem, the error message will reappear. Press the eject button, and pull out the disc.
Insert a different disc. If the new disc plays, there is a problem with the first disc. If the error message cycle repeats and you cannot clear it, take your vehicle to a dealer.

Error Message	Cause	Solution
FORMAT	Track/File format not supported	Current track will be skipped. The next supported track or file plays automatically.
BAD DISC PLEASE CHECK OWNER'S MANUAL PUSH EJECT	Mechanical error	Press the EJECT button, and pull out the disc(s). Check the disc for serious damage, signs of deformation, excessive scratches, and/or dirt (see page 258.) Insert the disc again. If the code does not disappear, or the disc(s) cannot be removed, consult your dealer. Do not try to force the disc out of the player.
BAD DISC PLEASE CHECK OWNER'S MANUAL	Servo error	

General Information

- When using CD-R/CD-RW discs, use only high quality CDs labeled for audio use.
- When recording a CD-R/CD-RW, the recording must be closed for it to be used by the system.
- Play only standard round CDs. Odd-shaped CDs may jam in the drive or cause other problems.
- Handle your CDs properly to prevent damage and skipping.

Protecting CDs

When a CD is not being played, store it in its case to protect it from dust and other contamination. To prevent warpage, keep CDs out of direct sunlight and extreme heat.

To clean a CD, use a clean soft cloth. Wipe across the CD from the center to the outside edge.

A new CD may be rough on the inner and outer edges. The small plastic pieces causing this roughness can flake off and fall on the recording surface of the CD, causing skipping or other problems. Remove these pieces by rubbing the inner and outer edges with the side of a pencil or pen.

Never try to insert foreign objects in the disc changer.

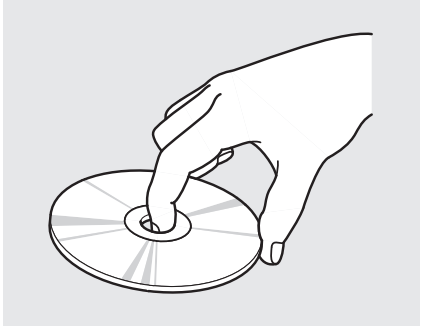

Handle a CD by its edges; never touch either surface. Do not place stabilizer rings or labels on the CD. These, along with contamination from fingerprints, liquids, and felt-tip pens, can cause the CD to not play properly or possibly jam in the drive.

CONTINUED

Additional Information on Recommended Discs
The in-dash disc player/changer has a sophisticated and delicate mechanism. If you insert a damaged disc as indicated in this section, it may become stuck inside and damage the audio unit.

Examples of these discs are shown to the right:

1. Bubbled, wrinkled, labeled, and excessively thick discs



Bubbled/ Wrinkled | **With Label/ Sticker** | **Using Printer Label Kit** | **Sealed** | **With Plastic Ring**

2. Damaged discs



Chipped/ Cracked | **Warped**

3. Poor quality discs

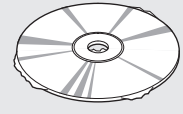

Burrs

4. Small, irregular shaped discs

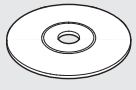

3-inch (8-cm) CD

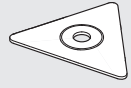

Triangle Shape

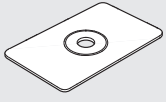

Can Shape



Arrow Shape

5. Discs with scratches, dirty discs

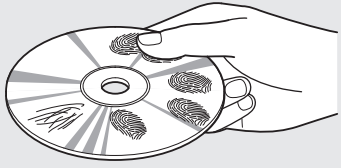

Fingerprints, scratches, etc.

- CD-R or CD-RW may not play due to the recording conditions.
- Scratches and fingerprints on the discs may cause the sound to skip.

- Recommended discs are printed with the following logo.

COMPACT disc DIGITAL AUDIO

- Audio unit may not play the following formats.

mp3

Plays Windows Media™

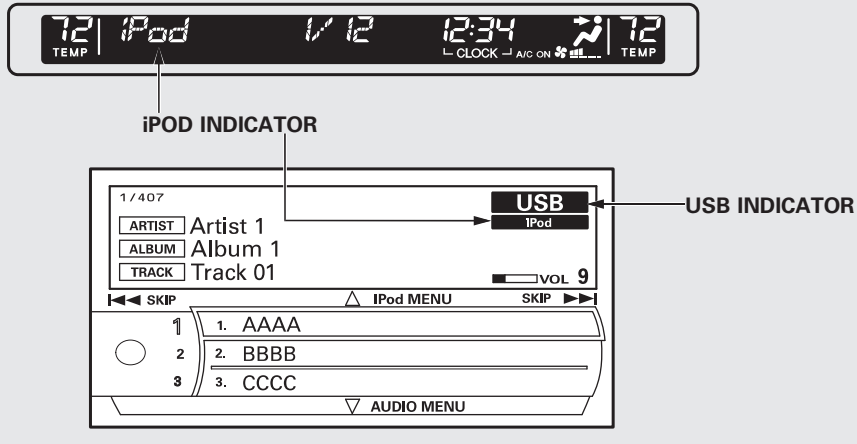

U.S. model is shown.

U.S. model is shown.

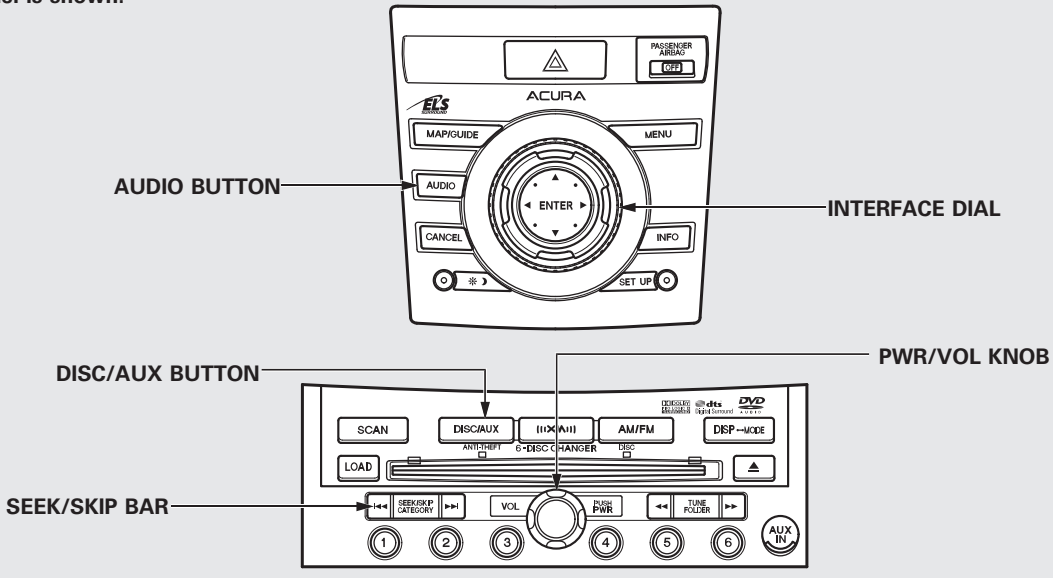

CONTINUED

To Play an iPod®
This audio system can operate the audio files on the iPod® with the same controls used for the in-dash disc changer. To play an iPod, connect it to the USB adapter cable in the console compartment by using your dock connector, then press the DISC/AUX button. The ignition switch must be in the ACCESSORY (I) or ON (II) position. The iPod will also be recharged with the ignition switch in these positions.

The system will only play songs stored on the iPod with iTunes.

iPod and iTunes are registered trademarks owned by Apple Inc.

Voice Control System
You can select the AUX mode by using the navigation system voice control buttons, but cannot operate the play mode functions.

iPod models confirmed to be compatible with your audio system using the USB adapter cable are:

Model
iPod classic 80/160 G
iPod classic 120 G
iPod classic 160 G (launch in 2009)
iPod (5th generation)
iPod nano
iPod touch

This system may not work with all software versions of these devices.

NOTE:

- Do not connect your iPod using a hub.
- Do not keep the iPod in the vehicle. Direct sunlight and high heat will damage it.
- Do not use an extension cable between the USB adapter cable equipped with your vehicle and your dock connector.
- We recommend backing up your data before playing it.
- Some devices cannot be powered or charged via the USB adapter, if this is the case use the accessory adapter to supply power to your device.

Connecting an iPod

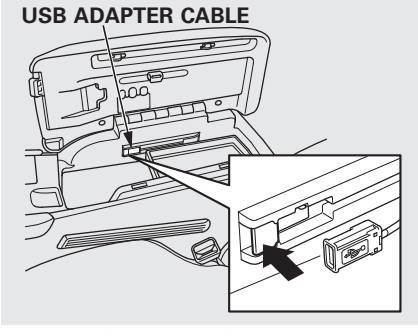

1. Push the release button to release the USB adapter cable.

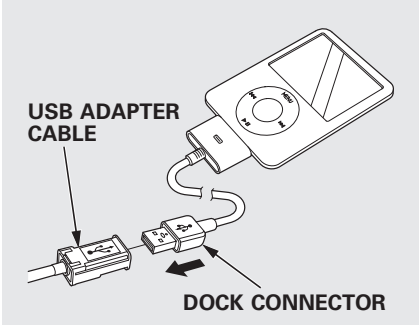

2. Connect your dock connector to the iPod correctly and securely.
3. Install the dock connector to the USB adapter cable securely.

If the iPod indicator does not appear in the audio display, check the connections, and try to reconnect the iPod a few times.

If the audio system still does not recognize the iPod, the iPod may need to be reset. Follow the instructions that came with your iPod, or you can find reset instructions online at *www.apple.com/ipod.*

The current file number and total of the selected playable files are displayed in the upper display. Pressing the AUDIO button displays the artist, album and track (file) names on the navigation screen.

CONTINUED

To Change or Select Files

Use the SKIP bar while an iPod is playing to select passages and change files.

SKIP – Each time you press and release the ▶▶| side of the SEEK/SKIP bar, the system skips forward to the beginning of the next file. Press and release the |◀◀ side of the bar, to skip backward to the beginning of the current file. Press it again to skip to the beginning of the previous file.

To move rapidly within a file, press and hold either side (▶▶| or |◀◀) of the SEEK/SKIP bar.

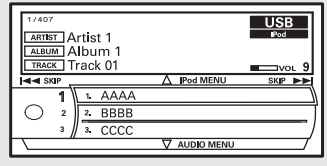

You can also change files with the interface dial. Press the AUDIO button to show the audio control display. Push the selector to the right side to skip forward and to the left side to skip backward.

To Select a File from iPod Menu



You can also select a file from any list on the iPod menu: playlists, artists, albums and songs, by using the interface dial. Press the AUDIO button to display the audio control display. Push up the interface selector to display the iPod menu. Turn the knob on the interface dial to select a desired list.

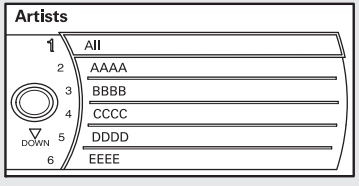

Push ENTER on the selector to display the items on that list, then turn the knob on the interface dial to select a desired list. Pushing the selector up or down moves a selection to the top or bottom of the screen items. Press ENTER to set your selection.

If you select “ALL” on either the artists or albums list, all available files on the selected list are played.

Press the AUDIO button to go back to the normal audio playing display. Pressing the CANCEL button goes back to the previous screen, and pressing the MAP button cancels the audio control display.

To Select Repeat or Random Mode:

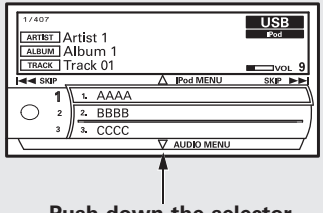

Push down the selector.

You can select any type of repeat and random mode on the audio menu. Press the AUDIO button to display the audio control display, then push down the selector to display the audio menu. Turn the knob on the interface dial to select an audio mode: repeat, album random, and track random. Press ENTER to set your selection.

CONTINUED

To cancel the selected mode, press ENTER again while the highlighted mode is selected on the audio control display.

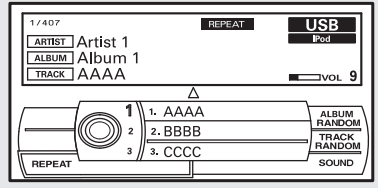

REPEAT – This feature continuously plays a file. To turn it off, press ENTER again.

Pressing either side of the SKIP bar changes the file while keeping the repeat feature.

TRACK RANDOM – This feature plays all available files from the selected items in the iPod menu list (playlists, artists, albums or songs) in random order. You will see TRACK RANDOM on the screen.

To turn it off, have this mode highlighted and press ENTER again.

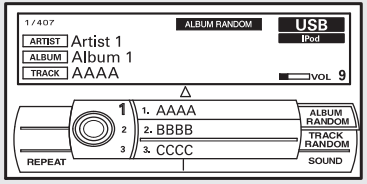

ALBUM RANDOM – This feature plays all available albums from the selected items in the iPod menu list (playlists, artists, albums or songs) in random order. The files in each album are played in the recorded order. You will see ALBUM RANDOM on the screen.

To turn it off, have this mode highlighted and press ENTER again.

You can also select another list from the iPod menu while keeping the random function.

NOTE:
Available operating function varies on the model or version. Some functions may not be available on the vehicle's audio system.

To Stop Playing Your iPod
To play the radio, press the AM, FM, or ((XM)) button. Press the DISC/AUX button to switch between disc (if a disc is loaded), *Bluetooth*® Audio, and the iPod.

CONTINUED

Disconnecting an iPod
You can disconnect the iPod at any time when you see the “OK to disconnect” message* in the iPod display. Always make sure you see the “OK to disconnect” message in the iPod display before you disconnect it. Make sure to follow the iPod's instructions on how to disconnect the dock connector from the USB adapter cable.

*: The displayed message may vary on the model or version. On some models, there is no message to disconnect.

When you disconnect the iPod while it is playing, the upper display and the audio control display (if selected) show NO DATA.

If you reconnect the same iPod, the system may begin playing where it left off, depending on what mode the iPod is in when it is reconnected.

iPod Error Messages
For information, see page 269.

If you see an error message on the upper display while playing an iPod, find the solution in the chart to the right. If you cannot clear the error message, take your vehicle to your dealer.

Error Message	Cause	Solution
USB ERROR	USB ROM error	There is a problem with the USB adapter unit.
BAD USB DEVICE PLEASE CHECK OWNERS MANUAL	Abnormal power source	Appears when the overcurrent protection feature of the system stops supplying power to USB because an incompatible device is connected. Disconnect the device. Then, turn the audio system off, and turn it on again. Do not reconnect the device that caused the error.
iPod NO SONG	No files in iPod	Appears when the iPod is empty. Store some files in the iPod.
UNSUPPORTED VER.	Use of unsupported iPod	Appears when an unsupported iPod is connected. See page 262 for specification information on iPods. If it appears when a supported iPod is connected, update the iPod software to the newer version.
CONNECT RETRY	Recognition failure of iPod	Appears when the system does not acknowledge the iPod. Reconnect the iPod.

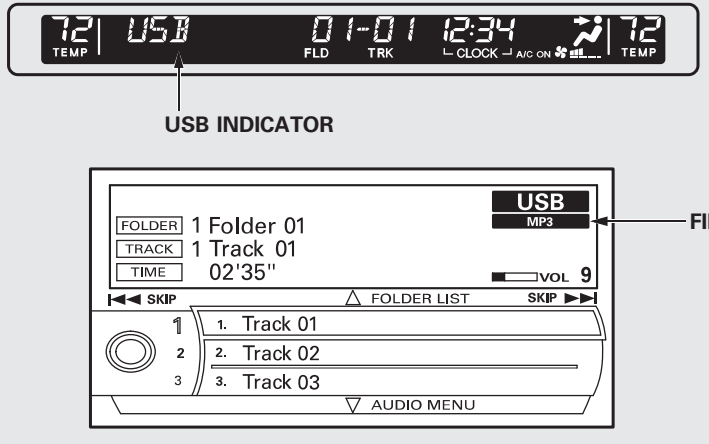

U.S. model is shown.

U.S. model is shown.

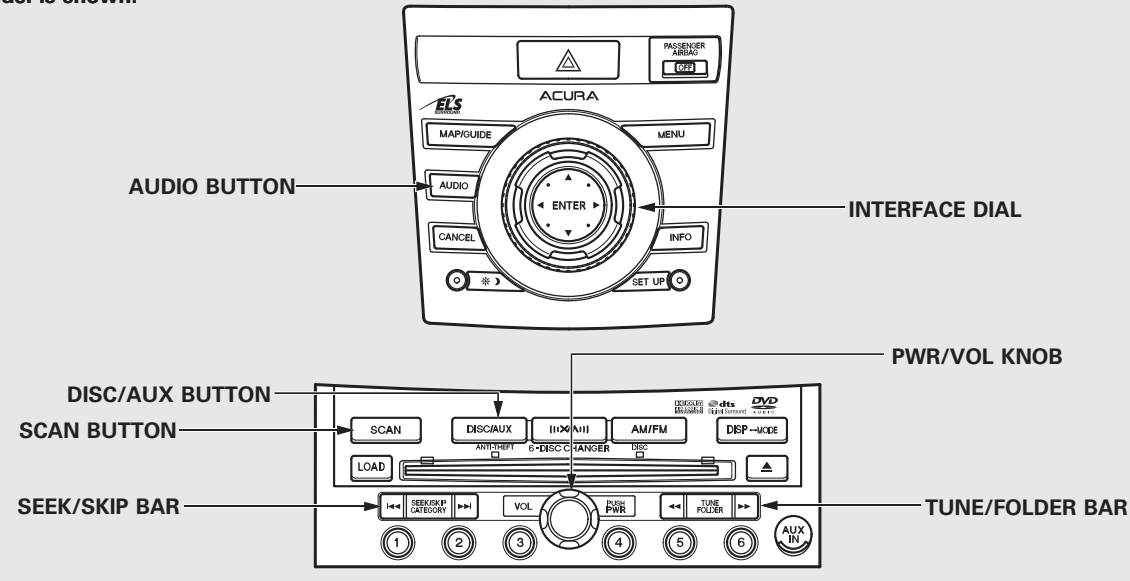

CONTINUED

To Play a USB Flash Memory Device

This audio system can operate the audio files on a USB flash memory device with the same controls used for the in-dash disc changer. To play a USB flash memory device, connect it to the USB adapter cable in the console compartment, then press the DISC/AUX button. The ignition switch must be in the ACCESSORY (I) or ON (II) position.

The audio system reads and plays the audio files on the USB flash memory device in MP3, WMA or AAC* formats. Depending on the format, the audio control display shows MP3, WMA or AAC when a USB flash memory device is playing.

*: Only AAC format files recorded with iTunes are playable on this audio unit.

The recommended USB flash memory devices are 256 MB or higher, and formatted with the FAT file system. Some digital audio players may be compatible as well.

Some USB flash memory devices (such as devices with security lock-out features, etc.) will not work in this audio unit.

Even if recorded in MP3, WMA or AAC format, unsupported files cannot be played. If the system finds it, the audio unit displays UNPLAYABLE, and then skips to the next file.

NOTE:

- Do not use a device such as a card reader or hard drive as the device or your files may be damaged.
- Do not connect your USB flash memory device using a hub.
- Do not use an extension cable to the USB adapter cable equipped with your vehicle.
- Do not keep a USB flash memory device in the vehicle. Direct sunlight and high heat will damage it.
- We recommend backing up your data before playing a USB flash memory device.
- Depending on the type and number of files, it may take some time before they begin to play.
- Depending on the software the files were made with, it may not be possible to play some files, or display some text data.
- Some devices cannot be powered or charged via the USB adapter, if this is the case use the accessory adapter to supply power to your device.
- Depending on the type of encoding and writing software used, there may be cases where character information does not display properly.

Voice Control System

You can select the AUX mode by using the navigation system voice control buttons, but cannot operate the play mode functions.

CONTINUED

Connecting a USB Flash Memory Device

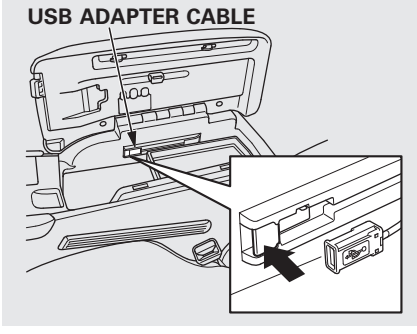

1. Push the release button to release the USB adapter cable.

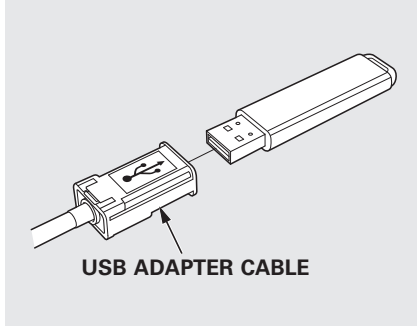

2. Connect the USB flash memory device to the USB adapter cable correctly and securely.

When the USB device is connected and the USB mode is selected on the audio system, the USB indicator is shown in the upper display. Pressing the AUDIO button to displays the folder and file names, and the elapsed time in the audio control display.

To Change or Select Files

Use the SKIP bar while a USB flash memory device is playing to select passages and change files.

SKIP – Each time you press and release the side of the SKIP bar, the system skips forward to the beginning of the next file. Press and release the side of the bar, to skip backward to the beginning of the current file. Press it again to skip to the beginning of the previous file.

To move rapidly within a file, press and hold either side (▶▶| or |◀◀) of the SKIP bar.

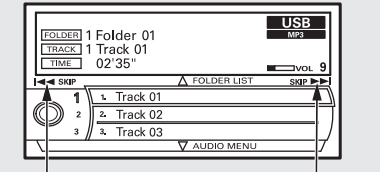

You can also change files with the interface dial. Press the AUDIO button to show the audio control display. Push the selector knob to the right side to skip to the beginning of the next file, and to the left side to skip to the beginning of the current file. Pushing it to the left again skips to the beginning of the previous file.

FOLDER SELECTION – To select a different folder, press and release the ▶▶ side of the TUNE/FOLDER bar to move to the beginning of the next folder. Press and release the ◀◀ side of the bar to move to the beginning of the previous folder.

To Select a File from Folder and File Lists

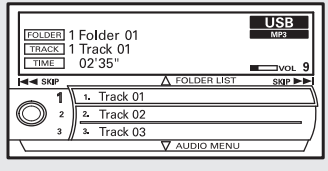

You can also select a folder or file from the list by using the interface dial. Press the AUDIO button to show the audio control display.

CONTINUED

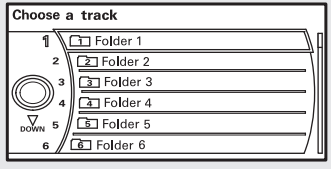

Push up the selector on the interface dial to switch the display to the folder list, then turn the knob on the interface dial to select a folder.

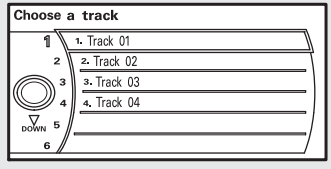

Press ENTER to change the display to the file list, then turn the knob on the interface dial to select a file. Press ENTER to set your selection.

To go back to the normal play display, press the AUDIO button. Pressing the CANCEL button goes back to the previous screen and pressing the MAP button cancels the audio control display.

To Select Repeat, Random or Scan Mode:

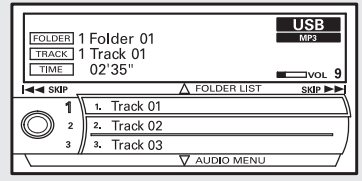

You can select any type of repeat, random and scan modes on the audio menu screen. Press the AUDIO button to show the audio control display. Push down the selector on the interface dial to display the audio menu items.

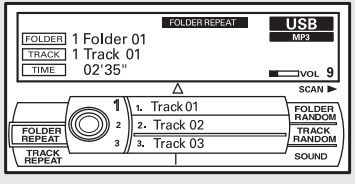

Turn the knob on the interface dial to select a play mode: folder random, track random, folder repeat, track repeat. Press ENTER to set your selection.

To cancel the selected mode, push down the selector to display the audio menu on the audio control display. Turn the knob on the interface dial to select the highlighted play mode, then press ENTER to turn off that selected mode.

FOLDER REPEAT – This feature replays all the files in the selected folder in the order they are stored. Pressing either side of the CATEGORY bar also turns off this feature.

TRACK REPEAT – This feature continuously plays a file. Pressing either side of the SKIP bar also turns off this feature.

FOLDER RANDOM – This feature plays the files in the selected folder in random order.

TRACK RANDOM – This feature plays all the files in random order.

TRACK SCAN – This function samples all files in the selected folder in the order they are stored. To activate the scan feature, push the selector to the right. You will see TRACK SCAN on the screen. You will also see SCAN on the upper display and the file number blinking. You will get a 10 second sampling of each file in the folder. Push the selector repeatedly to get out of the scan mode. The system plays the last file sampled.

You can also select the scan feature with the SCAN button on the control panel.
Press and release the SCAN button. Press and hold the SCAN button to get out of the scan mode and play the last file sampled.

CONTINUED

FOLDER SCAN – This function samples the first file in each folder in the order they are stored. To activate the folder scan feature, push the selector to the right repeatedly. You will see FOLDER SCAN on the screen. You will also see SCAN on the upper display and the folder number blinking. You will get a 10 second sampling of the first file in each folder. Push the selector repeatedly to get out of the scan mode. The system plays the last file sampled.

You can also select the folder scan feature with the SCAN button on the control panel. Press and release the SCAN button repeatedly.
Press and hold the SCAN button to get out of the folder scan mode and play the last file sampled.

To Stop Playing a USB Flash Memory Device
To play the radio, press the AM/FM or «» button. Press the DISC/AUX button to switch to the disc mode (if a disc is loaded). Press the DISC/AUX button to switch the audio mode between the USB mode and *Bluetooth*® Audio.

If you reconnect the same USB flash memory device, the system will begin playing where it left off.

USB Flash Memory Device Error Messages
For information, see page 279.

Disconnecting a USB Flash Memory Device
You can disconnect the USB flash memory device at any time even if the USB mode is selected on the audio system. Always follow the USB flash memory device's instructions when you remove it.

When you disconnect the USB flash memory device while it is playing, the upper display and the audio control display (if selected) show NO DATA.

USB Flash Memory Device Error Messages (Models with navigation system)

If you see an error message on the upper display while playing a USB flash memory device, find the solution in the chart to the right. If you cannot clear the error message, take your vehicle to your dealer.

Error Message	Cause	Solution
USB ERROR	USB ROM error	There is a problem with the USB adapter unit.
BAD USB DEVICE PLEASE CHECK OWNERS MANUAL	Abnormal power source	Appears when the overcurrent protection feature of the system stops supplying power to USB because an incompatible device is connected. Disconnect the device. Then, turn the audio system off, and turn it on again. Do not reconnect the device that caused the error.
UNPLAYABLE FILE	Use of unsupported files	Appears when the files in the USB flash memory device are DRM or an unsupported format. This error message appears for a few seconds, then plays the next song.
USB NO SONG	No files in USB flash memory device	Appears when the USB flash memory device is empty or there are no MP3, WMA, or AAC files in the USB flash memory device. Save some MP3, WMA, or AAC files in the USB flash memory device.
UNSUPPORTED	Use of unsupported USB flash memory device	Appears when an unsupported device is connected. See page 272 for information on USB flash memory devices. If it appears when the supported device is connected, reconnect the device.

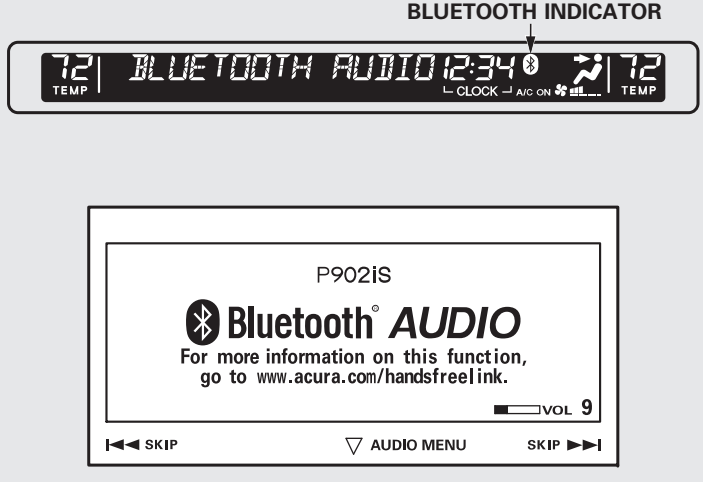

U.S. model is shown.

U.S. model is shown.

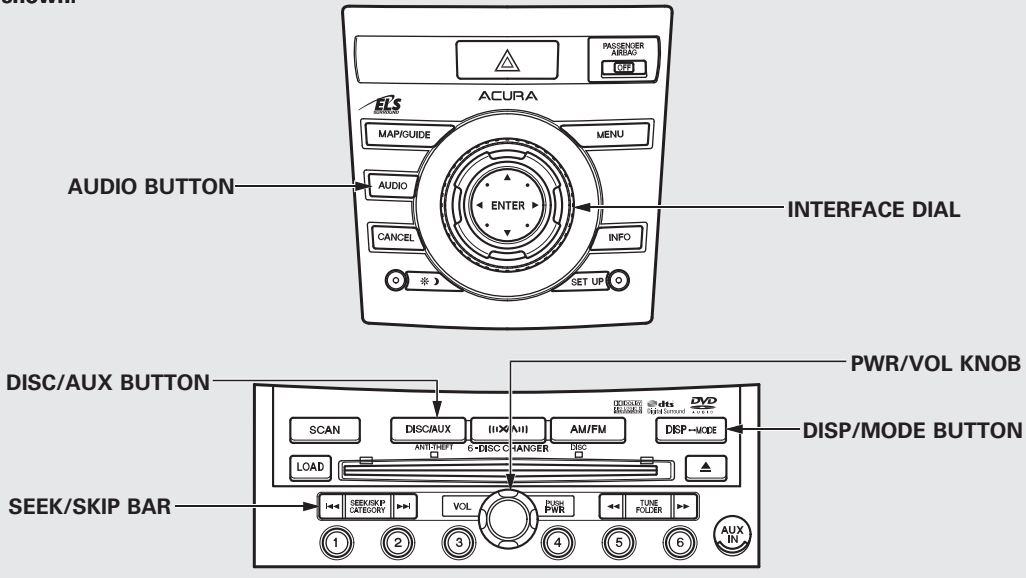

CONTINUED

Your vehicle is equipped with a *Bluetooth*® Audio system, which allows you to listen to streaming audio from your *Bluetooth*® Audio compatible phone. This function is only available on *Bluetooth*® Audio Compatible phones that are paired and linked to the vehicle's *Bluetooth*® HandsFreeLink® (HFL) system (see page 313).

Not all Bluetooth-enabled phones with streaming audio capabilities are compatible with the system. You can find an approved phone by visiting *www.acura.com/handsfreelink,* or by calling the HandsFreeLink® consumer support at 1-888-528-7876. In Canada, visit *www.acura.ca,* or call 1-888-9-ACURA-9.

NOTE: In some states, it may be illegal to perform some data device functions while driving.

To Play *Bluetooth*® Audio Files



Make sure that your phone is paired and linked to the HFL.

Press the DISC/AUX button* with the ignition switch in the ACCESSORY (I) or ON (II) position. When the phone is recognized, you will see the *Bluetooth*® Audio message and indicator on the upper display and the audio control display (if selected), and the system begins to play.

Once a device is linked, the name of the device will appear on the screen. Pressing the DISP/MODE button switches the audio control display between the *Bluetooth*® Audio and the device name.
If more than one phone is paired to the HFL system, there will be a delay before the system begins to play.

To play the audio files, you may need to operate your phone. If so, follow the phone maker's operating instructions.

*: If an iPod, USB flash memory device or audio unit connected to the auxiliary input jack was selected at the last mode, you will see iPod, USB or AUX in the upper display and the audio control display (if selected). Push the DISC/AUX button again to play audio files from your *Bluetooth*® Audio phone.

In the following conditions, the display shows a "NO CONNECT" message.

- The phone is not linked to HFL.
- The phone is not turned on.
- The phone is not in the vehicle.
- Another HFL compatible phone, which is not compatible for *Bluetooth*® Audio, is already connected.

If your *Bluetooth*® Audio compatible phone does not operate as described, make sure it is an Acura approved phone. To find out if your phone is approved, go to *www.acura.com/handsfreelink* (in Canada, *www.acura.ca*), or call the HandsFreeLink® consumer support at (888) 528-7876.

Voice Control System
You can select the AUX mode by using the navigation system voice control buttons, but cannot operate the play mode functions.

CONTINUED

To skip a file

Press the ▶▶| side of the SKIP bar to skip forward to the next file, and press the |◀◀ side to skip backward to the beginning of the current file. Push the |◀◀ side again to skip to the previous file.

You can also operate the skip function with the interface dial on the audio control display of the navigation screen. Push the AUDIO button. Each time you push the selector on the interface dial to the right, the system skips forward to the beginning of the next file. Push it to the left to skip backward to the beginning of the current file. Push the selector to the left again to skip to the previous file.

To pause or resume a file



The resume/pause mode can stop playing a file temporarily. Push down the selector on the interface dial to display the audio menu.

Turn the knob on the interface dial to switch the setting between the resume/pause mode and the sound mode. Select RESUME/PAUSE, then press ENTER to set your selection. Each time you press ENTER, the system switches between the resume mode and pause mode.

NOTE: The pause function may not be available on some phone devices.

To change sound settings



Press the AUDIO button, then push down the selector to display the audio menu. Turn the knob to switch the setting between the resume/pause mode and the sound mode. Select SOUND, then press ENTER to set your selection.

Turn the knob to select a sound mode, then press ENTER to set your selection. Turn the knob to your liking (see page 224 for more sound setting information).

To switch to HFL mode

If you receive a call when the *Bluetooth*® Audio is playing, press the HFL Talk button on the steering wheel. The audio control display and the upper display switch to the HFL mode (see page 309).

After ending the call, press the HFL Back button to go back to the *Bluetooth*® Audio mode.

If you receive a call while the system is in the pause mode, the mode will be canceled and *Bluetooth*® Audio will continue to play.

To turn off the Bluetooth® Audio mode

Select any other audio mode by pressing a button; AM/FM, XM or DISC/AUX (if a disc is loaded), on the audio control panel or press the mode button on the steering wheel repeatedly to select another audio mode. If an iPod or USB flash memory device is connected to the USB adapter cable or audio unit is connected to AUX jack, pressing the DISC/AUX button also changes a mode.

Switching to another mode pauses the music playing from your phone.

CONTINUED

As required by the FCC:
This device complies with Part 15 of the FCC rules. Operation is subject to the following two conditions: (1) This device may not cause harmful interference, and (2) this device must accept any interference received, including interference that may cause undesired operation.

Changes or modifications not expressly approved by the party responsible for compliance could void the user's authority to operate the equipment.

This device complies with Industry Canada Standard RSS-210.
Operation is subject to the following two conditions: (1) this device may not cause interference, and (2) this device must accept any interference that may cause undesired operation of the device.

FM/AM Radio Frequencies
The radio can receive the complete AM and FM bands.
Those bands cover these frequencies:

AM band: 530 to 1,710 kHz
FM band: 87.7 to 107.9 MHz

Radio stations on the AM band are assigned frequencies at least 10 kHz apart (530, 540, 550). Stations on the FM band are assigned frequencies at least 0.2 MHz apart (87.9, 88.1, 88.3).

Stations must use these exact frequencies. It is fairly common for stations to round-off the frequency in their advertising, so your radio could display a frequency of 100.9 even though the announcer may identify the station as “FM101.”

FM/AM Radio Reception
How well the radio receives stations is dependent on many factors, such as the distance from the station's transmitter, nearby large objects, and atmospheric conditions.

A radio station's signal gets weaker as you get farther away from its transmitter. If you are listening to an AM station, you will notice the sound volume becoming weaker, and the station drifting in and out. If you are listening to an FM station, you will see the stereo indicator flickering off and on as the signal weakens. Eventually, the stereo indicator will go off and the sound will fade completely as you get out of range of the station's signal.

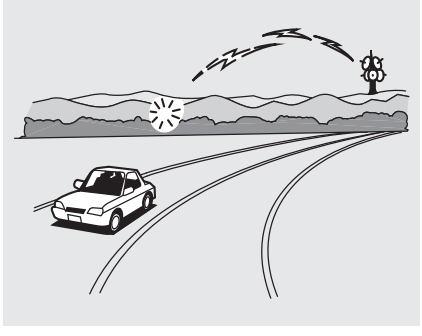

Driving very near the transmitter of a station that is broadcasting on a frequency close to the frequency of the station you are listening to can also affect your radio's reception. You may temporarily hear both stations, or hear only the station you are close to.

CONTINUED

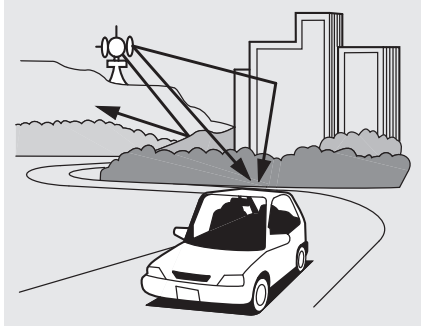

Radio signals, especially on the FM band, are deflected by large objects such as buildings and hills. Your radio then receives both the direct signal from the station's transmitter, and the deflected signal. This causes the sound to distort or flutter. This is a main cause of poor radio reception in city driving.



Radio reception can be affected by atmospheric conditions such as thunderstorms, high humidity, and even sunspots. You may be able to receive a distant radio station one day and not receive it the next day because of a change in conditions.

Electrical interference from passing vehicles and stationary sources can cause temporary reception problems.

As required by the FCC:
Changes or modifications not expressly approved by the party responsible for compliance could void the user's authority to operate the equipment.

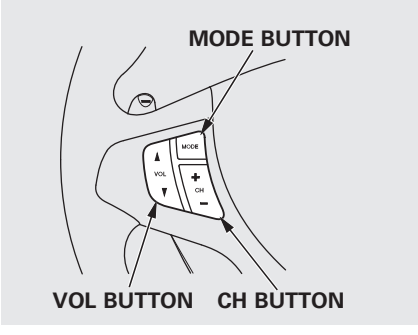

Three controls for the audio system are mounted in the steering wheel hub. They let you control basic functions without removing your hand from the steering wheel.

The VOL button adjusts the volume up (▲) or down (▼). Press the top or bottom of the button, hold it until the desired volume is reached, then release it.

The MODE button changes the mode.

On vehicles without navigation system

Pressing the MODE button repeatedly cycles through all possible media sources whether they are present or not.

On vehicles with navigation system

Pressing the MODE button repeatedly cycles through all present, connected media sources. Media sources that are not present or connected will not appear when cycling with the MODE button.

If you are listening to the radio, use the CH button to change stations. Each time you press and release the top (+) of the button, the system goes to the next preset station on the band you are listening to. Press and release the bottom (−) to go back to the previous station.

To activate the seek function, press and hold the top (+) or bottom (−) of the CH button until you hear a beep. The system searches up or down from the current frequency to find a station with a strong signal.

CONTINUED

If you are playing a disc, the system skips to the beginning of the next track (file in MP3 or WMA format) each time you press the top (+) of the CH button. Press the bottom (−) to return to the beginning of the current track/file. Press it twice to return to the previous track/file.

To select a different disc (folder in MP3/WMA mode), press and hold the top (+) or bottom (−) of the CH button until you hear a beep.

If you are listening to XM Radio, use the CH button to change channels. Each time you press the top (+) of the button, the system goes to the next preset channel. Press the bottom (−) to go back to the previous preset channel.

To go to the next channel of the category you are listening to, press and hold the top (+) or bottom (−) of the CH button until you hear a beep.

If you are playing a USB flash memory device or iPod with the USB adapter cable, press and release the top (+) of the CH button to skip forward to the beginning of the next file. Press the bottom (−) to skip backward to the beginning of the current file. Press it twice to return to the previous file.

When playing a USB flash memory device, you can also use the seek function to skip the folder. To activate this, press and hold either side of the CH button until you hear a beep.

Auxiliary Input Jack

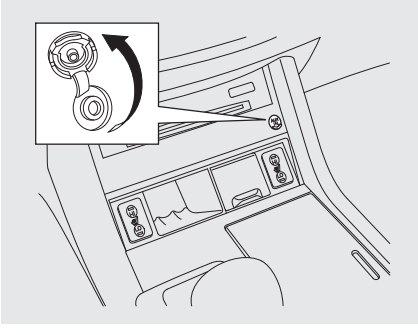

The auxiliary input jack is on the disc changer unit. The system will accept auxiliary input from standard audio accessories.

When the audio system is on and you plug in a mini-jack cable between a compatible audio unit and the jack, you will see AUX in the display and the system automatically switches to AUX mode.

Radio Theft Protection

If your vehicle's battery is disconnected or goes dead, the audio system disables itself. If this happens, you will see "ENTER CODE" in the frequency display next time you turn on the system. Use the preset bars (Icons on models with navigation system) to enter the five-digit code. The code is on the Anti-theft Identification Card included in your owner's manual kit. When it is entered correctly, the radio will start playing.

The Anti-theft Identification Card also lists your audio serial number. It is best to store the card in a safe place at home. In addition, you should write the audio system's serial number in this owner's manual

CONTINUED

If you make a mistake entering the code, do not start over; complete the five-digit sequence, then enter the correct code. You have ten tries to enter the correct code. If you are unsuccessful in ten attempts, you must then leave the system on for one hour before trying again.

The system will retain your AM and FM presets even if power is disconnected.

NOTE:
If you have a My Acura account, you can retrieve the anti-theft code online.

US owners
We recommend that you register the security code at My Acura (myacura.com). If you lose the Anti-theft Identification Card before registering the code at My Acura, you must obtain the code from your dealer or https://radio-navicode.acura.com/. To do this, you will need the audio system's serial number. If you do not have the serial number with you, ask your dealer or go to https://radio-navicode.acura.com/ for information on how to retrieve it.

Canadian owners
If you lose the Anti-theft Identification Card, you must obtain the code from your dealer. To do this, you will need the audio system's serial number. If you do not have the serial number with you, ask your dealer how to retrieve it.

On models with navigation system
You need to enter a separate code for the navigation system to reactivate. The Anti-theft Card also lists the navigation system's security code and serial number. Follow the same procedure to retrieve the serial number and obtain the code, and read the navigation system manual for details.

On models without navigation system
To set the time, press the SOUND/CLOCK button until you hear a beep, then release the button. The displayed time begins to blink.

Change the hour by pressing the H (preset 4) side of the preset bar until the numbers advance to the desired time. Change the minute by pressing the M (preset 5) side of the bar until the numbers advance to the desired time.

You can quickly set the time to the nearest hour. If the displayed time is before the half hour, pressing the SOUND/CLOCK button until you hear a beep, then pressing the R (preset 6) side of the preset bar sets the clock back to the previous hour. If the displayed time is after the half hour, the clock sets forward to the beginning of the next hour.

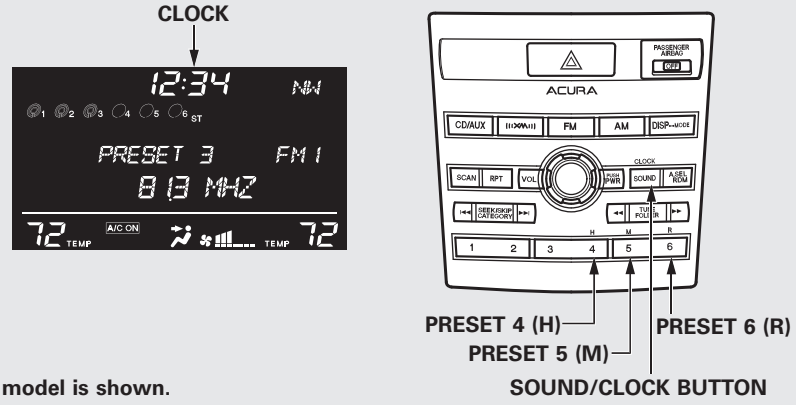

U.S. model is shown.

When you are finished, press the SOUND/CLOCK button again to set the time.

On models with navigation system
The navigation system receives signals from the global positioning system (GPS), and the displayed time is updated automatically by the GPS. Refer to the navigation system manual for how to adjust the time.

The security system helps to protect your vehicle and valuables from theft. The horn sounds and a combination of headlights, parking lights, side marker lights, and taillights flashes if someone attempts to break into your vehicle or remove the audio unit. This alarm continues for two minutes, then the system resets. To deactivate the system before the two minutes have elapsed, unlock the driver's door with the key or the remote transmitter.

The security system automatically sets 15 seconds after you lock the doors, hood, and the tailgate. For the system to activate, you must lock the doors and the tailgate from the outside with the key, or use driver's lock tab, door lock master switch, or remote transmitter. The security system indicator on the instrument panel starts blinking immediately to show you the system is setting itself.



SECURITY SYSTEM INDICATOR

Once the security system sets, opening any door, the tailgate, or the hood without using the key or the remote transmitter, will cause the alarm to activate. It also activates if the audio unit is removed from the dashboard or the wiring is cut.

The alarm also activates if a passenger inside the locked vehicle turns the ignition switch on.

The security system does not set if the hood, tailgate, or any door is not fully closed. Before you leave the vehicle, make sure the doors, tailgate, and hood are securely closed.

NOTE: To see if the system is set after you exit the vehicle, press the LOCK button on the remote transmitter within five seconds. If the system is set, a beep will sound.

Do not attempt to alter this system or add other devices to it.

Compass Operation

On models without navigation system

The compass shows your direction of travel. It indicates eight directions.

The compass is displayed on the center display when you turn the ignition switch to the ON (II) position.

The compass can be affected by driving near power lines or stations, across bridges, through tunnels, over railroad crossings, past large vehicles, or driving near large objects that cause magnetic interference. It can also be affected by accessories such as antennas and roof racks that are mounted by magnets.

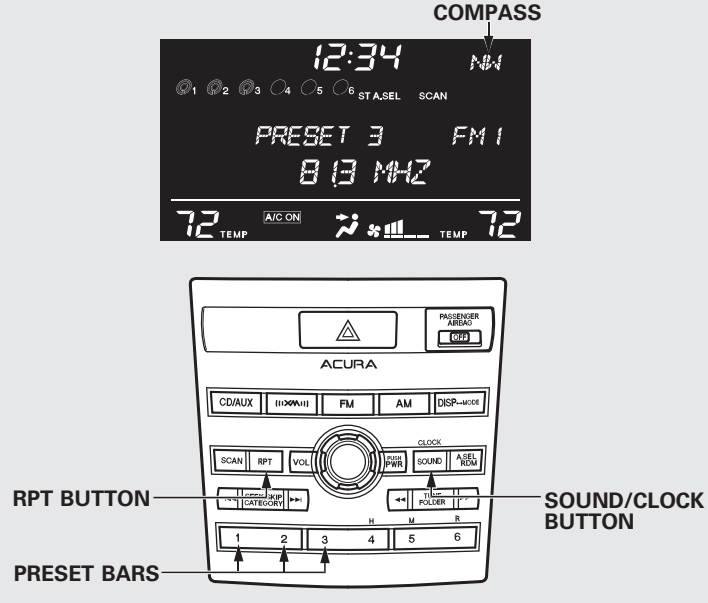

U.S. model is shown.

CONTINUED

Compass Calibration



If the compass direction is blinking and the CAL indicator is shown, the compass is self-calibrating.

The compass may need to be manually calibrated after exposure to a strong magnetic field. If the compass seems to be continually showing the wrong direction and is not self-calibrating, do the following.

NOTE: Do this procedure in an open area, away from buildings, power lines, and other vehicles.



1. Press and hold the SOUND/CLOCK and RPT buttons at the same time for about 2 seconds. You will hear a beep, then the display will change to the compass setting mode as shown above.

2. Select “CAL” by pressing preset 1 to enter the calibration mode. If you want to cancel this mode, select “R” by pressing preset 3. The display will return to the normal display.
3. Select “CAL START” by pressing preset 1. The system will start the calibration. “CAL” will appear on the display, then the direction will also begin to blink. If you select “R” by pressing preset 3, the display will return to the compass setting mode.

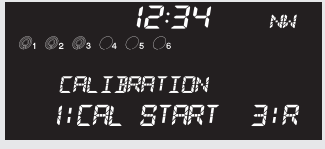

4. When the direction stops blinking, the calibration mode is completed. The display will return to the normal display.

Compass Zone Selection

In most areas, there is a variation between magnetic north and true north. Zone selection is required so the compass can compensate for this variation. To check and select the zone set into the compass, do the procedure on the following pages.

CONTINUED



1. Press and hold the SOUND/CLOCK and RPT buttons at the same time for about 2 seconds. You will hear a beep, then the center display will change to the compass setting mode as shown above.

2. Select “ZONE” by pressing preset 2 to enter the zone setting mode. The display will change to zone setting mode, and show you the current zone setting. If you want to cancel this mode, select “R” by pressing preset 3. The display will return to the normal display.
3. Find the zone for your area on the map (see next page).

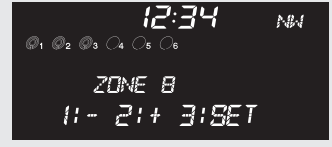

4. If the zone is incorrect, press preset 1 (−) or preset 2 (+) to get the zone number to count up and down. When you finish setting the correct zone, or want to cancel this mode without changing the current setting, select “SET” by pressing preset 3. The display will return to the normal display.



* Guam Island : Zone 8
* Puerto Rico : Zone 11

Cruise control allows you to maintain a set speed above 25 mph (40 km/h) without keeping your foot on the accelerator pedal. It should be used for cruising on straight, open highways. It is not recommended for city driving, winding roads, slippery roads, heavy rain, or bad weather.

⚠WARNING

Improper use of the cruise control can lead to a crash.

Use the cruise control only when traveling on open highways in good weather.

Using Cruise Control

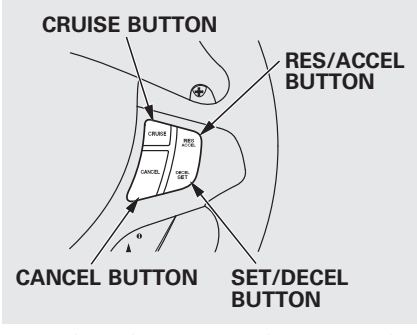

1. Push in the CRUISE button on the steering wheel. The CRUISE MAIN indicator on the instrument panel comes on.
2. Accelerate to the desired cruising speed above 25 mph (40 km/h).
3. Press and release the SET/DECEL button on the steering wheel. The CRUISE CONTROL indicator on the instrument panel comes on to show the system is now activated.

Cruise control may not hold the set speed when you are going up and down hills. If your vehicle speed increases going down a hill, use the brakes to slow down. This will cancel the cruise control. To resume the set speed, press the RES/ACCEL button. The CRUISE CONTROL indicator on the instrument panel will come back on.

Changing the Set Speed
You can increase the set cruising speed in any of these ways:

- Press and hold the RES/ACCEL button. When you reach the desired cruising speed, release the button.
- Push on the accelerator pedal. Accelerate to the desired cruising speed, then press the SET/ DECEL button.
- To increase your speed in very small amounts, tap the RES/ ACCEL button. Each time you do this, the vehicle speeds up about 1 mph (1.6 km/h).

You can decrease the set cruising speed in any of these ways:

NOTE: If you need to decrease your speed quickly, use the brakes as you normally would.

- Press and hold the SET/DECEL button. Release the button when you reach the desired speed.
- To slow down in very small amounts, tap the SET/DECEL button. Each time you do this, your vehicle will slow down about 1 mph (1.6 km/h).
- Tap the brake pedal lightly with your foot. The CRUISE CONTROL indicator on the instrument panel will go out. When the vehicle slows to the desired speed, press the SET/DECEL button.

Even with cruise control on, you can still use the accelerator pedal to speed up for passing. After completing the pass, take your foot off the accelerator pedal. The vehicle will return to the set cruising speed.

Resting your foot on the brake pedal causes cruise control to cancel.

CONTINUED

Canceling Cruise Control

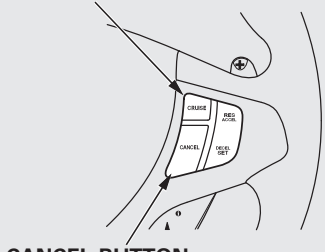

You can cancel cruise control in any of these ways:

- Tap the brake pedal.
- Push the CANCEL button on the steering wheel.
- Push the CRUISE button on the steering wheel.

The cruise control will be canceled when the vehicle speed reaches about 25 mph (40 km/h) or less.

Tapping either of the paddle shifters shifts the gear up or down, but the cruise control will be canceled if you downshift to first gear.

For more information on driving with paddle shifters, see page 380.

Resuming the Set Speed

When you push the CANCEL button or tap the brake pedal, the system remembers the previously set speed. To return to that speed, accelerate to above 25 mph (40 km/h), then press and release the RES/ACCEL button. The CRUISE CONTROL indicator comes on. The vehicle accelerates to the same speed as before.

Pressing the CRUISE button turns the system completely off and erases the previous cruising speed.

The HomeLink® Universal Transceiver built into your vehicle can be programmed to operate up to three remote controlled devices around your home, such as garage doors, lighting, or home security systems.

General Safety Information
Before programming your HomeLink to operate a garage door opener, confirm that the opener has an external entrapment protection system, such as an "electronic eye," or other safety and reverse stop features.

If your garage door was manufactured before April 1, 1982, you may not be able to program HomeLink to operate it. These units do not have safety features that cause the motor to stop and reverse it if an obstacle is detected during closing, increasing the risk of injury. Do not use HomeLink with any garage door opener that lacks safety stop and reverse features.

Units manufactured between April 1, 1982 and January 1, 1993 may be equipped with safety stop and reverse features. If your unit does not have an external entrapment protection system, an easy test to confirm the function and performance of the safety stop and reverse feature is to lay a 2 × 4 under the closing door. The door should stop and reverse upon contacting the piece of wood. As an additional safety feature, garage door openers manufactured after January 1, 1993 are required to have external entrapment protection systems, such as an electronic eye, which detect an object obstructing the door.

Important Safety Precautions
Refer to the safety information that came with your garage door opener to test that the safety features are functioning properly. If you do not have this information, contact the manufacturer of the equipment. Before programming HomeLink to a garage door or gate opener, make sure that people and objects are out of the way of the device to prevent potential injury or damage. When programming a garage door opener, park just outside the garage.

Training HomeLink
Before you begin – If you just received your vehicle and have not trained any of the buttons in HomeLink before, you should erase any previously learned codes before training the first button. To do this, press and hold the two outside buttons on the HomeLink transceiver for about 20 seconds, until the red indicator flashes. Release the buttons, then proceed to step 1.

CONTINUED

HomeLink® Universal Transceiver

If you are training the second or third buttons, go directly to step 1.

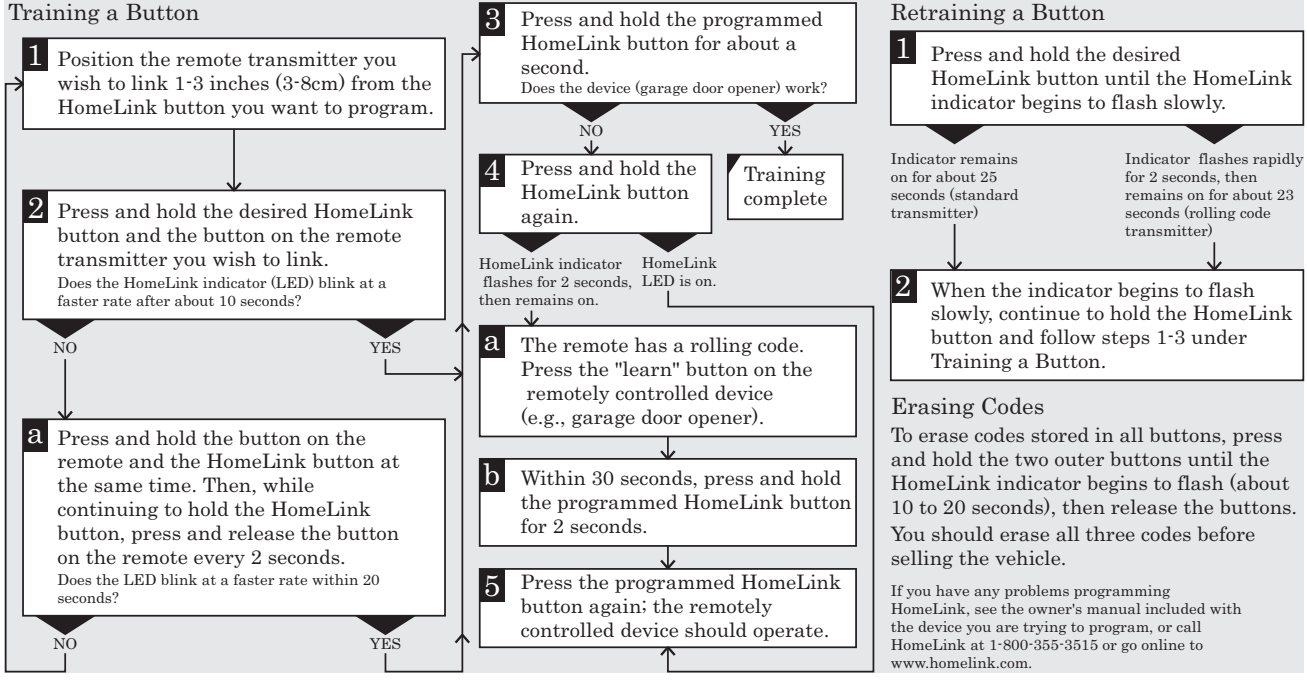

Erasing Codes

To erase codes stored in all buttons, press and hold the two outer buttons until the HomeLink indicator begins to flash (about 10 to 20 seconds), then release the buttons.

You should erase all three codes before selling the vehicle.

If you have any problems programming HomeLink, see the owner's manual included with the device you are trying to program, or call HomeLink at 1-800-355-3515 or go online to www.homelink.com.

HomeLink® is a registered trademark of Johnson Controls, Inc.

As required by the FCC:
This device complies with Part 15 of the FCC rules. Operation is subject to the following two conditions: (1) This device may not cause harmful interference, and (2) this device must accept any interference received, including interference that may cause undesired operation.

Changes or modifications not expressly approved by the party responsible for compliance could void the user's authority to operate the equipment.

This device complies with Industry Canada Standard RSS-210.
Operation is subject to the following two conditions: (1) this device may not cause interference, and (2) this device must accept any interference that may cause undesired operation of the device.

Bluetooth® HandsFreeLink® (HFL) allows you to place and receive phone calls using voice commands, without handling your cell phone.

To use HFL, you need a Bluetooth-compatible cell phone. For a list of compatible phones, pairing procedures, and special feature capabilities:

In the U.S., visit *www.acura.com/handsfreelink,* or call (888) 528-7876.

In Canada, visit *www.acura.ca,* or call (888) 9-ACURA-9.

Using HFL

HFL buttons

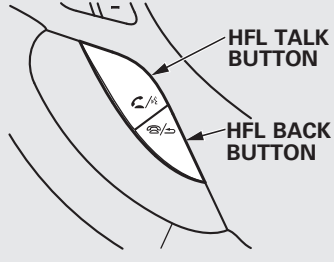

On models without navigation system

HFL Talk button – Press and release to give a command or answer a call.

HFL Back button – Press and release to end a call, go back to the previous command, or cancel the command.

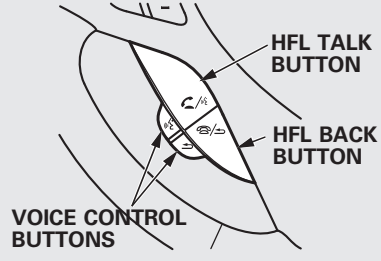

On models with navigation system

Below the HFL buttons is another set of voice control buttons for the navigation, climate control, and audio systems. To use the voice control system, refer to the navigation system manual.

Voice Control Tips

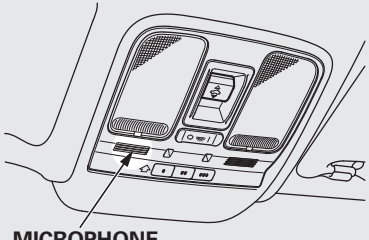

- Air or wind noise from the dashboard and side vents and all windows may interfere with the microphone. Adjust or close them as necessary.
- Press and release the HFL Talk button each time you want to make a command. After the beep, speak in a clear, natural tone.
- Try to reduce all background noise. If the microphone picks up voices other than yours, commands may be misinterpreted.
- Many commands can be spoken together. For example, you can say “Call 123-456-7890” or “Dial Peter.”
- When HFL is in use, navigation voice commands cannot be recognized.
- To change the volume level of HFL, use the audio system volume knob or the steering wheel volume controls.

CONTINUED

Help Features

- To hear general HFL information, including help on pairing a phone or setting up the system, say "Tutorial."
- For help at any time, including a list of available commands, say "Hands free help."

Information Display

As an incoming call notification, you will see the following display:

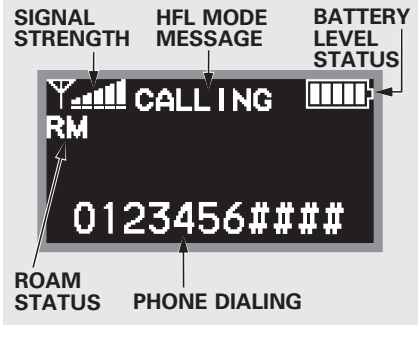

Some phones may send battery, signal strength, and roaming status information to HFL.

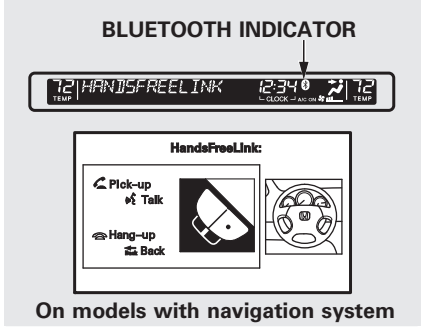

On models with navigation system

A notification that there is an incoming call, or HFL is in use, will appear on the navigation screen when the audio system is on.

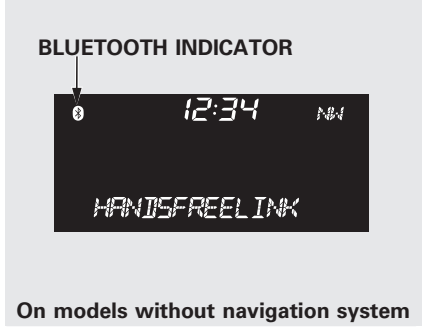

On models without navigation system

When there is an incoming call, or HFL is in use, "HANDSFREELINK" will appear on the audio display.

The *Bluetooth*® indicator will also appear on the audio display when a phone is linked.

CONTINUED

How to Use HFL

The ignition switch must be in the ACCESSORY (I) or ON (II) position.

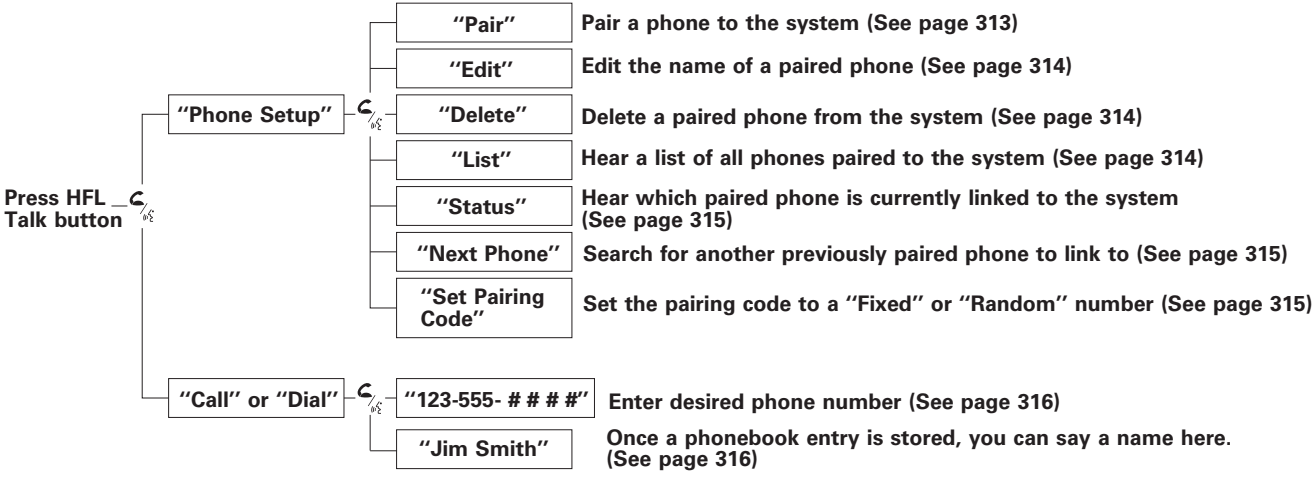

Press and release the HFL Talk button each time you give a command.

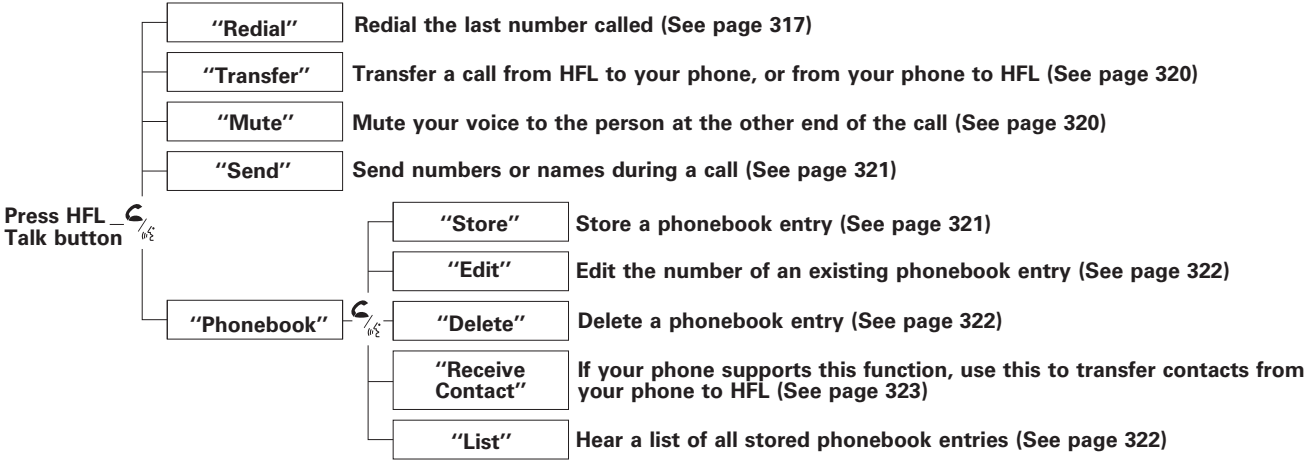

Press and release the HFL Talk button each time you give a command.

CONTINUED

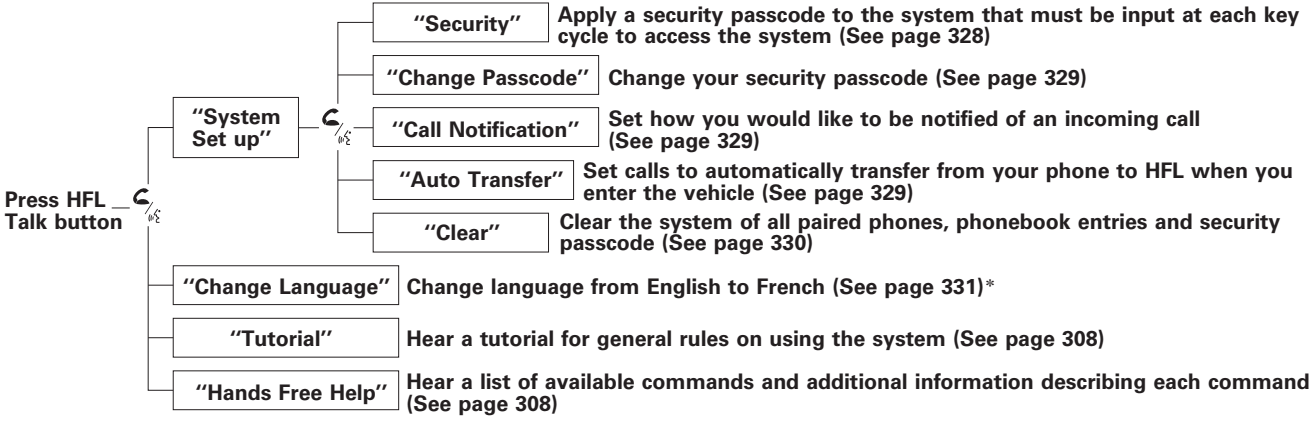

Press and release the HFL Talk button each time you give a command.

* : Canadian models

To use HFL, you need to pair your Bluetooth-compatible cell phone to the system.

Phone Setup
This command group is available for paired cell phones.

Phone pairing tips
- You cannot pair your phone while the vehicle is moving.
- Your phone must be in discovery or search mode to pair. Refer to your phone's manual.
- Up to six phones can be paired.
- Your phone's battery may drain faster when it is paired to HFL.
- If after three minutes your phone is not ready to pair or a phone is not found, the system will time out and return to idle.

To pair a cell phone:
1. Press and release the HFL Talk button. If you are pairing a phone for the first time, HFL will give you information about the pairing process. If it is not the first phone you are pairing, say "**Phone setup**" and say "**Pair**."
2. Follow the HFL prompts and put your phone in discovery or search mode. HFL will give you a 4-digit pairing code and begin searching for your phone.
3. When your phone finds a Bluetooth device, select HFL from the options and enter the 4-digit code from the previous step.
4. Follow the HFL prompts and name the newly paired phone.

On U.S. vehicles with navigation system
Once the pairing process is completed, AcuraLink may display a connection confirmation screen. This screen is used to create a data connection between your cell phone and the AcuraLink system. You can choose to set up the data connection later, or do it later. If you want to do it now, exit the HFL menu by pressing the HFL Back button one or more times.

CONTINUED

To rename a paired phone:
Press and release the HFL Talk button before a command.

1. Say "**Phone setup**."
2. Say "**Edit**" after the prompts.
3. If there is more than one phone paired to the system, HFL will ask you which phone's name you want to change. Follow the HFL prompts and rename the phone.

To delete a paired phone:
Press and release the HFL Talk button before a command.

1. Say "**Phone setup**."
2. Say "**Delete**" after the prompts.
3. HFL will ask you which phone you want to delete. Follow the HFL prompts to continue with the deletion.

To hear the names of all paired phones:
Press and release the HFL Talk button before a command.

1. Say "**Phone setup**."
2. Say "**List**" after the prompts.
3. HFL will read out all the paired phone's names.

To hear which paired phone is currently linked:
Press and release the HFL Talk button before a command.

1. Say "**Phone setup**."
2. Say "**Status**" after the prompts.
3. HFL will tell you which phone is linked to the system.

To change from the currently linked phone to another paired phone:
Press and release the HFL Talk button before a command.

1. Say "**Phone setup**."
2. Say "**Next Phone**" after the prompts.
3. HFL will tell you which phone is linked to the system.
4. Once another phone is found, it is linked to the system. HFL will inform you which phone is now linked.

If no other phones are found or paired, HFL will inform you that the original phone is linked again.

To change the pairing code setting:
Press and release the HFL Talk button before a command.

1. Say "**Phone setup**."
2. Say "**Set pairing code**" after the prompts.
3. If you want HFL to create a random code each time you pair a phone, say "**Random**." If you want to choose your own 4-digit code to be used each time, say "**Fixed**" and follow the HFL prompts.

CONTINUED

Making a Call
You can make calls using a name in the HFL phonebook or any phone number. You can also redial the last number called.

HFL uses a Class 2 Bluetooth, which means, the maximum range between your phone and vehicle is 30 feet (10 meters).

During a call, HFL allows you to talk up to 30 minutes after you remove the key from the ignition switch. However, this may weaken the vehicle's battery.

To make a call using a name in the HFL phonebook:
Press and release the HFL Talk button before a command.

1. Say "**Call**" or "**Dial**."
2. Follow the HFL prompts and say the name stored in the HFL phonebook that you want to call.
3. Follow the HFL prompts to confirm the name and make the call.

To make a call using a phone number:
Press and release the HFL Talk button before a command.

1. Say "**Call**" or "**Dial**."
2. Follow the HFL prompts and say the phone number you want to dial.
3. Follow the HFL prompts to confirm the number and say "**Call**" or "**Dial**."

Once connected, you will hear the person you called through the audio speakers.

To redial the last number called by HFL:

Press and release the HFL Talk button and say "**Redial**."

To make a call from an imported phonebook (on models with navigation system):

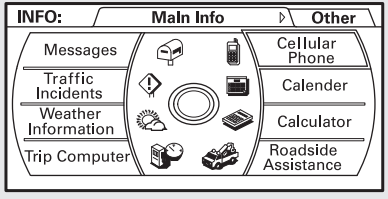

1. Press the INFO button, and the INFO screen will be shown.

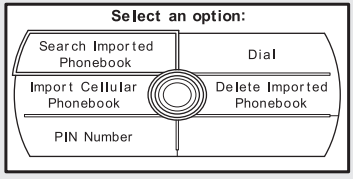

2. From the INFO screen, select "**Cellular Phone**."
3. Select "**Search Imported Phonebook**."

CONTINUED

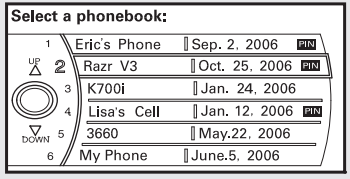

4. Select a phonebook you want to choose a phone number from.

   If the phonebook you select is PIN protected, you will need to enter the PIN to access it. See page 326 for more information.

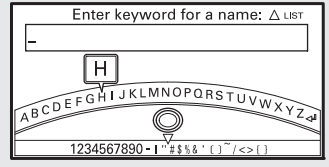

To search for a specific name in the phonebook, enter the keyword for either the first or last name.

To display all names in the phonebook, select the "**List**" option.

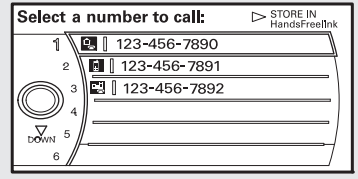

5. Select the name. All the phone numbers stored for that name will be listed.
6. Select the phone number and push the interface selector, HFL begins dialing.

If you choose "**Store in HandsFreeLink,**" the phone number will be stored in HFL, so you can call it using a voice tag.

To make a call using the navigation display (on models with navigation system):

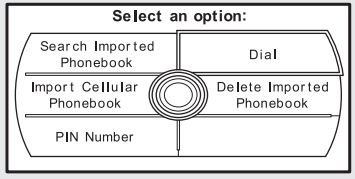

1. From the INFO screen, select "Cellular Phone," then select "Dial."

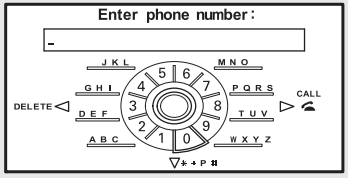

2. The navigation display will change as shown above. Enter a phone number.
3. To make a call, press the selector on the interface dial to the right.
4. To end the call, press the HFL Back button.

CONTINUED

Receiving a Call
When you receive a call, an incoming call notification (if activated) will play and interrupt the audio system if it is on.

Press the HFL Talk button to answer the call, or the HFL Back button to hang up.

Call Waiting
If your phone has Call Waiting, press and release the HFL Talk button to put the original call on hold and answer the incoming call.

To return to the original call, press the HFL Talk button again. If you don't want to answer the incoming call, disregard it and continue with your original call. If you want to hang up the original call and answer the new call, press the HFL Back button.

Transferring a Call
You can transfer a call from HFL to your phone, or from your phone to HFL.

Press and release the HFL Talk button and say "**Transfer**."

Muting a Call
You can mute your voice to the person you are talking to during a call.

To mute your voice during a call, press and release the HFL Talk button and say "**Mute.**"

To unmute your voice, press and release the HFL Talk button and say "**Mute**" again.

Send Numbers or Names During a Call

HFL allows you to send numbers or names during a call. This is useful when you call a menu-driven phone system.

To send a name or number during a call:

Press and release the HFL Talk button before a command.

1. Say "Send."
2. Follow the HFL prompts and say the name or number you want to send.
3. Follow the HFL prompts to send the tones and continue the call.

NOTE: To send a pound (#), say "pound." To send a star (*), say "star."

Phonebook

You can store up to 50 names with their associated numbers on HFL. The numbers you store can be not only phone numbers but other types, such as account numbers or passwords, which can be sent during a menu-driven call.

To store a phonebook entry:

Press and release the HFL Talk button before a command.

1. Say "**Phonebook**."
2. Say "**Store**" after the prompts.
3. Say a name you want to list as your phonebook entry.
4. Say the number you want to store for the name entry.
5. Follow the HFL prompts and say "**Enter**" to store the entry.

NOTE:

- Avoid using duplicate name entries.
- Avoid using "home" as a name entry.
- It is easier for HFL to recognize a multisyllabic or longer name. For example, use "Peter" instead of "Pete," or "John Smith" instead of "John."

CONTINUED

To edit the number stored in a name:
Press and release the HFL Talk button before a command.

1. Say "**Phonebook**."
2. Say "**Edit**" after the prompts.
3. Follow the HFL prompts and say the name entry you want to edit.
4. When asked, say the new number for that name.
5. Follow the HFL prompts to complete the edit.

To delete a name:
Press and release the HFL Talk button before a command.

1. Say "**Phonebook**."
2. Say "**Delete**" after the prompts.
3. Say the name you want to delete and follow the HFL prompts to complete the deletion.

To list all names in the phonebook:
Press and release the HFL Talk button before a command.

1. Say "**Phonebook**."
2. Say "**List**" after the prompts.
3. HFL begins reading the names in the order they were stored.
4. If you hear a name you want to call, immediately press the HFL Talk button and say "**Call**."

To store a specific phone number from your cell phone directly to the HFL phonebook (available on some phones):
Press and release the HFL Talk button before a command.

1. Say "**Phonebook**."
2. Say "**Receive contact**" after the prompts.
3. Follow the HFL prompts, select a number from your cell phone, and send it to HFL.
4. Follow the HFL prompts and name the number, or say "**Discard**" if it is not the number you want to store.
5. Follow the HFL prompts if you want to store another number.

On models with navigation system
Cellular Phone Options
(available on some phones)

If you select **Cellular Phone** from the INFO screen menu, you will see five HFL options.

For a list of cell phones that are compatible with this feature:

In the U.S., visit *www.acura.com/handsfreelink,* or call (888) 528-7876.

In Canada, visit *www.acura.ca,* or call (888) 9-ACURA-9.

Import Cellular Phonebook:
The entire phonebook data of the cell phone that is linked to HFL can be imported to the navigation system.

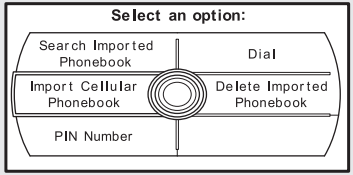

Select "**Import Cellular Phonebook,**" and HFL will begin importing the phonebook. Select "**OK**" after the import is completed.

CONTINUED

Search Imported Phonebook:
Once a phonebook has been imported, you can search the phone numbers by the person's name.

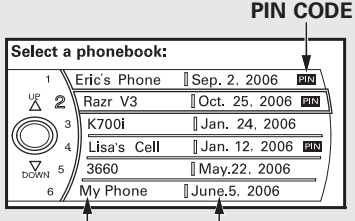

Select "**Search Imported Phonebook**," and a list of imported phonebooks will be displayed.

Select a phonebook from the list.

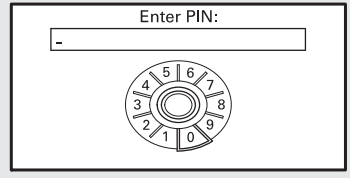

If the phonebook is PIN-protected, you will need to enter the 4-digit PIN.

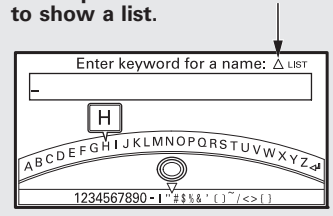

To search for a specific name in the phonebook, enter the keyword for either the first or last name.

To display all names in the phonebook, select the "List" option.

Select a person from the list. Up to three category icons are displayed in the left side of the list:



Preference



Home



Cell phone



Work



Pager



Fax



Car



Voice



Other

These category icons indicate how many numbers are stored for the name. If a name has more than three category icons, "···" is displayed.

Select the person's number you want to call, and press the HFL Talk button.

CONTINUED

Delete Imported Phonebook:
You can delete any imported phonebook.

Select "**Delete Imported Phonebook,**" and a list of imported phonebooks will be displayed.

Select a phonebook you want to delete. If the phonebook is PIN protected, you will need to enter the 4-digit PIN number.

After making a selection, the following screen will appear.

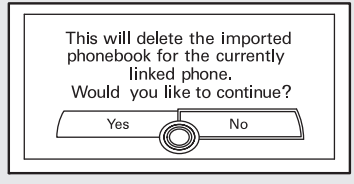

Select "**Yes,**" then "**OK**" to complete the deletion.

PIN Number
You can add, change, or remove a PIN number from any phonebook.

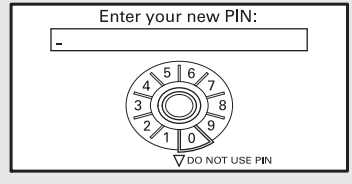

To add a PIN:
If you have selected a phonebook without a PIN, you will see the above display.

Enter the new 4-digit PIN. You will have to re-enter the PIN for confirmation.

To change the PIN to a new number:

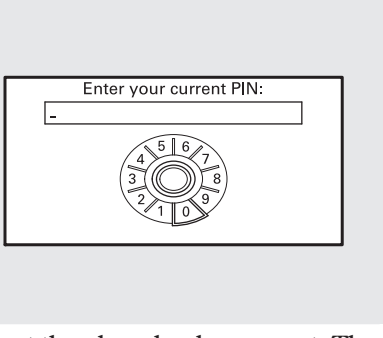

Select the phonebook you want. The display will change as shown above.

Enter the current PIN for this phonebook.

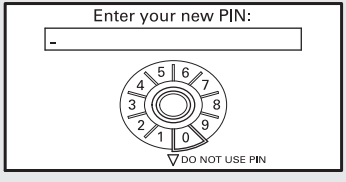

The display will change as shown above.

Enter the new 4-digit PIN number. You will be asked to re-enter the PIN for verification.

To remove a PIN:

Select "**PIN number,**" then select "**Do not use PIN**" after you enter the current PIN.

CONTINUED

System Setup
This command group allows you to change or customize HFL basic settings.

To set a 4-digit passcode to lock the HFL system for security purposes:
Press and release the HFL Talk button before a command.

1. Say "**System setup**."
2. Say "**Security**" after the prompts.
3. Follow the HFL prompts and say the 4-digit passcode you want to set.
4. Follow the HFL prompts to confirm the number.

NOTE: Once a passcode is set, you will need to enter it to use HFL each time you start the vehicle. If you forget the code, your dealer will have to reset it for you, or you will have to clear the entire system (see page 330).

To change your security pass code:
Press and release the HFL Talk button before a command.

1. Say "**System setup**."
2. Say "**Change passcode**" after the prompts.
3. Follow the HFL prompts and say the new 4-digit passcode.
4. Follow the HFL prompts to confirm the number.

To select either a ring tone or a prompt as the incoming call notification*:
Press and release the HFL Talk button before a command.

1. Say "**System setup**."
2. Say "**Call notification**" after the prompts.
3. Follow the HFL prompts and say "**Ring tone**" or "**Prompt**." You can also say "**Off**" for no audible incoming call notification.

*: The default setting is a ring tone.

To activate or deactivate the auto transfer function:
If you get into the vehicle while you are on the phone, the call can be automatically transferred to HFL with the ignition switch in the ACCESSORY (I) or ON (II) position.

1. Say "**System setup**."
2. Say "**Auto transfer**" after the prompts.
3. HFL will let you know if auto transfer is on or off, depending on the previous setting. Follow the HFL prompts to change the setting.

CONTINUED

To clear the system:
This operation clears the passcodes, paired phones, all names in the HFL phonebook, and all imported phonebook data.

Press and release the HFL Talk button before a command.

1. Say "**System setup**."
2. Say "**Clear**" after the prompts.
3. Follow the HFL prompts to continue to complete the clearing procedure.

You can also clear the system when you have forgotten the passcode and cannot access HFL. When HFL asks you for the passcode, say "**System clear**." Paired phones, all names in the HFL phonebook and all imported phonebook data will be lost.

Quick Language Selection
Canadian models only

To quickly change the language:
Press and release the HFL Talk button before a command.

1. Say the language you want to change to in that language.
2. Follow the HFL prompts.

Change Language
Canadian models only

To change the system language between English and French:
Press and release the HFL Talk button before a command.

1. Say "**Change language**."
2. Follow the HFL prompts to change the language to English or French.

If you have not named your paired phone in the language you just selected, HFL will ask you to name it in the current language.

When French is your currently selected language, you can give voice commands in French.

Bluetooth® Wireless Technology
The *Bluetooth*® name and logos are registered trademarks owned by Bluetooth SIG, Inc. and any use of such marks by Honda Motor Co., Ltd. is under license. Other trademarks and trade names are those of their respective owners.

HFL Limitations
An incoming call on HFL will interrupt *Bluetooth*® Audio when it is playing. Audio will resume when the call is ended.

U.S. models only
In addition, you cannot use HFL while using AcuraLink.

As required by the FCC:
This device complies with Part 15 of the FCC rules. Operation is subject to the following two conditions: (1) This device may not cause harmful interference, and (2) this device must accept any interference received, including interference that may cause undesired operation.

Changes or modifications not expressly approved by the party responsible for compliance could void the user's authority to operate the equipment.

This device complies with Industry Canada Standard RSS-210.
Operation is subject to the following two conditions: (1) this device may not cause interference, and (2) this device must accept any interference that may cause undesired operation of the device.

On models with navigation system except Alaska, Hawaii, and Puerto Rico

AcuraLink enhances your ownership experience by providing a direct communication link between your vehicle and the Acura Server. Working through the XM radio satellite, AcuraLink works in conjunction with the navigation system, *Bluetooth*® HandsFreeLink® (HFL), and audio system in your vehicle. It displays and receives several kinds of messages, including:

- Operating tips and information on your vehicle's features.
- Important recall and safety information.
- Maintenance information to keep your vehicle in top condition.
- Diagnostic information to provide information about any problems with your vehicle.

Interface Dial

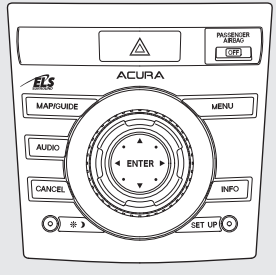

Most AcuraLink functions are controlled by the interface dial. The interface dial has two parts, a knob and a selector.

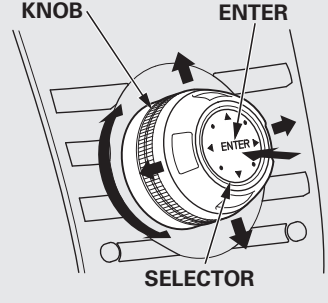

The knob turns left and right. Use it to make selections or adjustments to a list or menu on the screen.

The selector can be pushed left, right, up, down, and in. Use the selector to scroll through lists, to select menus, and to highlight menu items. When you make a selection, push the center of the selector (ENTER) to go to that selection.

Reading Messages

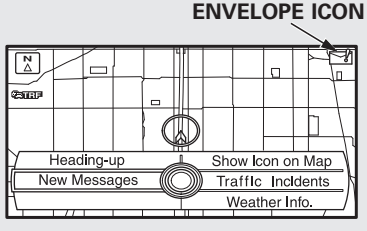

If you have new messages, an envelope icon appears in the top right corner of the navigation screen.

To open a message:

- Press ENTER on the interface selector, then select New Messages from the navigation system map menu. If there is more than one message stored in the system, you will see a list of message titles.

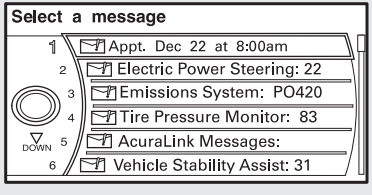

- Select “Messages” to display the “Select a message category:” screen. Then, select ALL MESSAGES.
- Scroll up or down, and select the message you want to read by pressing ENTER on the interface selector.

To view previously read messages:

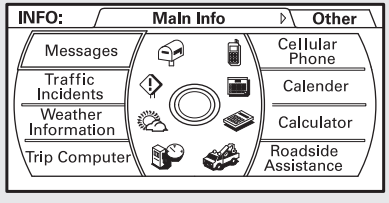

Press the INFO button, and the INFO screen will be shown.

CONTINUED

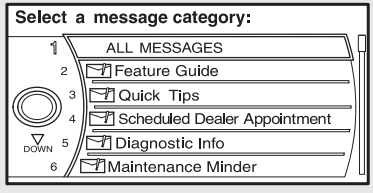

Select “Messages”, then select a message category. Select the message you want to read and press ENTER.

Unread messages have a closed envelope icon next to them. The icon disappears when it has already been read.

NOTE: Only diagnostic info messages overlay the screen while driving. They indicate that your vehicle has a problem that may need immediate attention (see page 345).

After purchasing your vehicle, messages may not appear immediately.
Your dealer has to register the vehicle identification before you can receive messages. This can take several days to process.

Deleting Messages

NOTE: Diagnostic info and recall/campaign messages can only be deleted by your dealer.

To delete a single message:

- Press the INFO button to bring up the Information screen.
- Scroll to the Messages option, then select it by pressing ENTER on the interface selector.
- Use the interface knob to scroll up or down to the message title you want to delete, and select it by pressing ENTER on the interface selector.
- Scroll to Delete with the interface knob, and select it by pressing ENTER on the interface selector.

To delete all messages:

NOTE: The Delete All Messages command does not apply to Recall or Diagnostic Info messages. These messages must be deleted by your dealer.

- Press the SET UP button to view the setup screen.
- Select MORE by pushing the interface selector to the right.
- Use the interface knob to scroll to the AcuraLink/Messages option, and select it by pressing ENTER on the interface selector.
- Scroll to the Delete Messages option, and select it by pressing ENTER on the interface selector.
- Scroll to the category with the messages you want to delete, and select the category by pressing ENTER on the interface selector.

Message Options

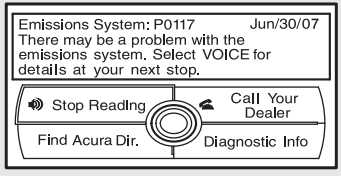

When you open a message, you can read a summary of it, and then choose one of several options. If an option is not available for a message, that option will not be highlighted.

CONTINUED

Delete – Select this option to delete the current message.

Voice – Select this option to hear a voice read the entire message. This gives you more information than the screen can display at one time. When you select the Voice option, it changes to a Stop Reading option. Select the option again to stop the voice.

Call – Select this button to call a phone number embedded in the message. When you select **Call,** the *Bluetooth*® HandsFreeLink® (HFL) dials the number for you.

To make a call, your *Bluetooth*® compatible phone must be paired to your vehicle's HandsFreeLink system, have its power on, and be inside the vehicle (see page 313).

Find Nearest Acura Dealer – Select this option to find the nearest Acura dealer using the navigation system.

Call Your Acura Dealer – Select this button to call the Acura dealer you purchased your vehicle from. AcuraLink also directs you to this dealer so you can schedule a maintenance appointment or receive information about a message. If you visit another dealer for service two times within a 14-month period, AcuraLink will reset to call that dealer.

Diagnostic Info – Select this button to get more information about the current diagnostic message. To use this option, your cell phone must be linked to the HFL and have a compatible data service available. Access the Owner Link website to find out which data services are currently compatible with AcuraLink.

Message Preferences
To set your AcuraLink preferences (the types of messages you want to receive, if any), visit the My Acura website at *www.owners.acura.com* If you do not have internet access, call Acura Client Relations at (800) 382-2238; they can set your message preferences for you.

AcuraLink/Message Screen

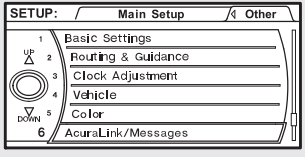

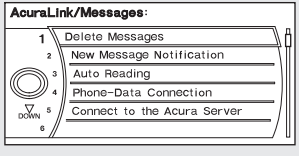

To access the following functions, press the SETUP button, push the interface selector to the right to select MORE, then rotate the interface knob to select AcuraLink/Messages.

Delete Messages – Select this option to delete all stored messages within a category, except for diagnostic info and recall campaign messages. These messages can only be deleted by a certified technician after the recall is done or the problem is corrected, or through a broadcast message from Acura.

New Message Notification – Select ON if you want to be notified of new messages (envelope icon appears on the navigation screen). Select OFF if you do not want to be notified of new messages (envelope icon does not appear on the navigation screen).

Auto Reading – Select ON to have the system automatically read each message to you. Select OFF to manually select the Voice option when you want a message read to you.

Phone-Data Connection – Select this option to begin the process required to connect to Acura. This is used to access the most recent diagnostic information when a problem occurs.

CONTINUED

NOTE: For the Phone Data Connection button to be active, you need a *Bluetooth*® compatible and enabled cell phone paired to the *Bluetooth*® HandsFreeLink® (HFL). To complete the data connection setup, the paired phone must have a compatible data service.

To find more information on *Bluetooth*® compatible and enabled cell phones, visit *www.acura.com/handsfreelink* or call the HandsFreeLink® consumer support at 1-888-528-7876.

Connect to the Acura Server – The default setting is prompt. When a diagnostic info message appears, and you select the Check Now option, the system will prompt you before connecting to the Acura server. If you do not wish to connect at that time, select No at the prompt, and you will see the information from the onboard database. The "Auto" setting will remove the prompt when you select the Check Now option and will automatically connect to the Acura server. This setting only applies when you have a *Bluetooth*® enabled phone that is paired with HFL and you have completed the Phone-Data Connection setup.

Message Categories
There are six message categories in AcuraLink: Quick Tips, Feature Guides, Maintenance Minders, Recalls/Campaigns, Diagnostic Info, and Scheduled Dealer Appointment. The system can store up to 255 messages.

Message categories can be added, revised, or deleted through broadcast messages from Acura.

Quick Tips

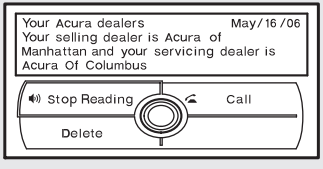

These messages, based on updated vehicle information and comments from other RDX owners, supplement your Owner's Manual and Advanced Technology Guide. They provide you with relevant information for a safe and enjoyable ownership experience. For additional information, call Acura Client Relations directly through the HFL.

Feature Guide

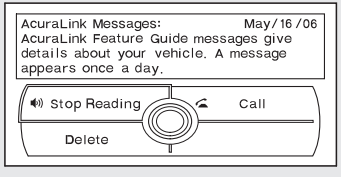

During the first 90 days of ownership, one of 22 different messages appears each day. These messages help you to use and understand the technological features of your vehicle.

Maintenance Minder™

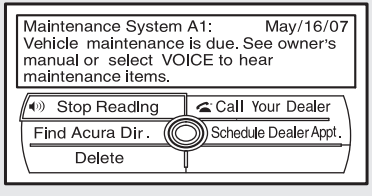

These messages provide detailed information about the service needed for your vehicle. When a maintenance message appears on the multi-information display, a list of needed maintenance items is provided through an AcuraLink message. These messages tell you the exact maintenance needed, helping you to avoid unnecessary maintenance costs.

CONTINUED

You can use the following message options:

- Make an appointment from the schedule at the dealer.
- Reschedule the appointment with the dealer.
- Call your dealer for an appointment.
- Find the nearest dealer.

Automated Appointment

You can make an appointment with your dealer through AcuraLink when you receive a Maintenance Minder message.

To use the automated appointment function, you should visit the Owner Link website at *www.owners.acura.com,* register some required settings, and complete the Phone-Data Connection set-up (see page 337). Your *Bluetooth®* compatible phone should also be paired and linked to your vehicle's *Bluetooth®* HFL (see page 313).

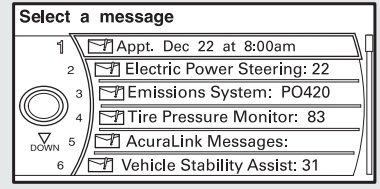

When you see the Maintenance Minder message on the multi-information display, you will also receive a message in the navigation screen. To open the message, press ENTER. Select “New Messages,” then press ENTER. You will see the list of all messages. The most recent message is listed at the top.

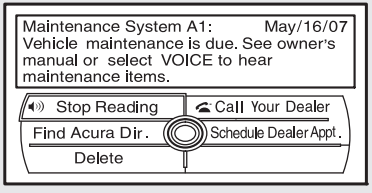

Select the received message, then press ENTER. You will see the message as shown. To make an appointment, select “Schedule Dealer Appt.” then press ENTER.

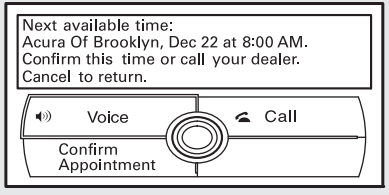

The system will automatically connect to the Acura server, then show you an appropriate appointment date and time on the navigation screen. If you accept this appointment, select “Confirm Appointment,” then press ENTER.

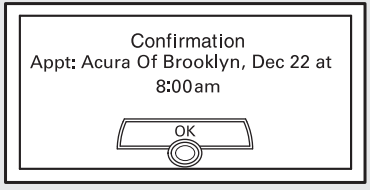

The confirmation message will be displayed on the screen. Make sure to confirm the appointment date, time and dealer. If it is OK, press ENTER.

If you want to change or reschedule the appointment date, select “Cancel,” then press ENTER.

CONTINUED

Scheduled Dealer Appointment

To reschedule the appointment:

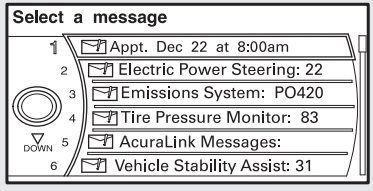

Press the INFO button to go to the information screen, select “Messages,” and select “Scheduled Dealer Appointment” from the message category list. Then press ENTER.

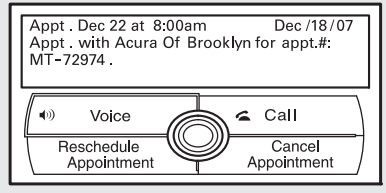

You will see the screen to reschedule as shown. To make an appointment, select “Reschedule Appointment,” then press ENTER.

The system will automatically connect to the Acura server, then show you a new appointment date and time on the navigation screen. If you accept this appointment, select “Confirm Appointment,” then press ENTER.

To cancel the appointment:

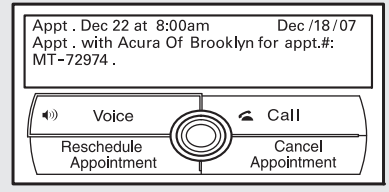

Select “Messages” on the information screen, then press ENTER. Select “Scheduled Dealer Appointment” from the message category list. Then press ENTER. To cancel the appointment, select “Cancel Appointment.”

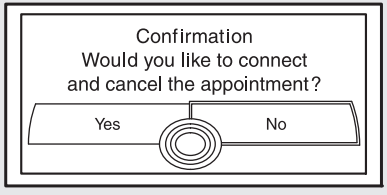

The system will request you to confirm the cancellation on the navigation screen. To cancel the appointment, select “YES,” then press ENTER. If you select “NO,” the screen goes back to the previous message display.



The system will automatically connect to the Acura server, then show you the confirmation on the navigation screen. If you accept the cancellation, press ENTER.

If you cancel the appointment, you cannot reschedule it. If you want to change or reschedule the appointment date, call your dealer directly with HFL.

CONTINUED

Using automated appointment, your registered dealer through Owner Link is automatically selected. If you want to select another dealer, such as in case of an emergency, find the nearest dealer and call the dealer directly with HFL.

When a maintenance appointment is due soon, you will also receive an appointment reminder message.

Recall/Campaigns

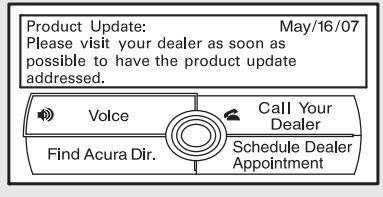

If your vehicle is affected by a recall or other important safety information, a letter will be mailed to you about the issue and how to fix it. If you don't get your vehicle fixed, you will also receive a reminder message through AcuraLink. You can then use the message options to call your dealer for an appointment or to find the nearest dealer.

For this reason, it is important that we retain your current phone number. Please update your information using My Acura at *www.owners.acura.com.*

Diagnostic Info
When an indicator comes on or a message is displayed on the Multi-Information Display (MID), AcuraLink can provide information about the cause of the indicator or message and the recommended action to address it. This helps you handle the problem as it occurs, preventing or limiting costly repairs.

The AcuraLink system cannot determine some mechanical problems (such as squeaks or rattles) that are not triggered by the diagnostic indicator monitors.

A diagnostic message is generated if any of the instrument panel indicators stay on when they should go off. For more information on the instrument panel indicators, see page 63.

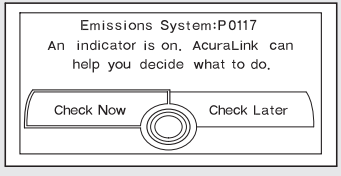

When an instrument panel indicator comes on or a message is displayed on the MID, AcuraLink immediately notifies you with the message, “Check more information.” If you do not want the information right away, select the Check Later option. If you want the information now, select the Check Now option. (If the navigation screen is not active, you must select OK from the navigation disclaimer screen before you can check the information.)

Depending on the severity of the problem, the message will let you know if you should see your dealer immediately or if you can wait a while.

CONTINUED

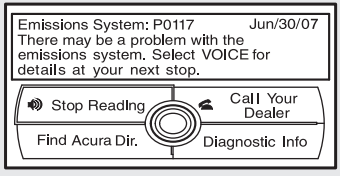

You will see information from the onboard troubleshooting database.

You can then use message options to call your dealer for an appointment, to find the nearest dealer, or to find out more information about the issue.

When you select the Diagnostic Info option, if the HFL is connected to a cellular data service, AcuraLink gathers more information about the problem, and sends it to Acura. There, the information is analyzed and returned to the vehicle with the most accurate repair information.

NOTE: There may not be any additional information, depending on the time elapsed since the previous time you retrieved the information from the Acura server.

Reminder Message

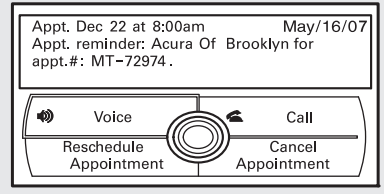

When you make an appointment through My Acura's online Schedule Service Appointment, you can be reminded in advance about that appointment through AcuraLink.

If you need to reschedule or cancel the appointment, see page 342.

Turning the Automated Appointment preference off will disable appointment notifications in the vehicle based on appointments created or changed at My Acura's online scheduling website.

Appointments can still be created, rescheduled, and canceled from the vehicle; however, the appointment information stored in the vehicle will not be updated. Any changes to those appointments should be made from the My Acura website.

As required by the FCC:
This device complies with Part 15 of the FCC rules. Operation is subject to the following two conditions: (1) This device may not cause harmful interference, and (2) this device must accept any interference received, including interference that may cause undesired operation.

Changes or modifications not expressly approved by the party responsible for compliance could void the user's authority to operate the equipment.

This device complies with Industry Canada Standard RSS-210.
Operation is subject to the following two conditions: (1) this device may not cause interference, and (2) this device must accept any interference that may cause undesired operation of the device.

On models with navigation system

Refer to the navigation system manual for operation of the rearview camera.

On models without navigation system

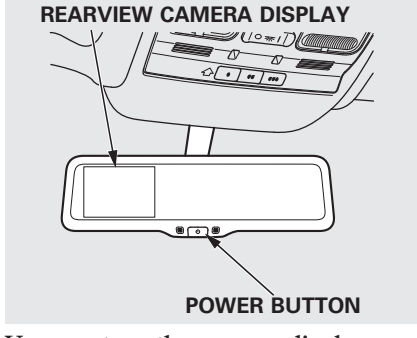

You can turn the camera display on and off by pressing the power button when the shift lever is in reverse. The camera display turns on everytime you shift to reverse, even if you turned it off the last time.

Whenever you shift to reverse (R) with the ignition switch in the ON (II) position, the rear view appears on a display in the rearview mirror.

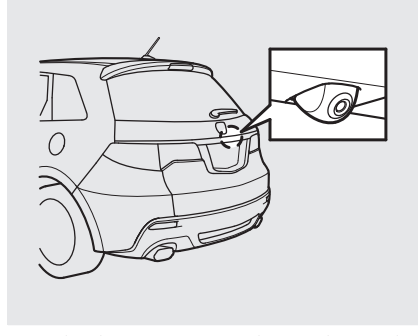

For the best picture, always keep the rearview camera clean, and do not cover the camera lens. To avoid scratching the lens when you clean it, use a moist, soft cloth.

Since the rearview camera display area is limited, you should always back up slowly and carefully, and look behind you for obstacles.

If the engine has just been started, it may take a short time for the system to display the rearview.

The camera display brightness is adjusted automatically by sensors. If you use the camera display continuously at high temperature, the image will gradually dim and eventually turn off automatically. If you change to another shift position, the camera display will come on again when you return to reverse.

The inside mirror will be hot when you use the monitor for an extended period of time.

If a bright light (such as sunlight) is reflected on the mirror, the image may be difficult to see.

Rearview Camera Guide Line

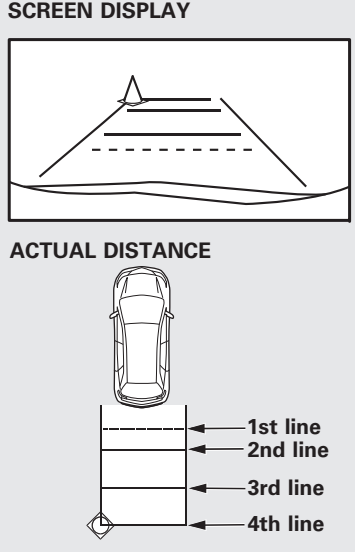

The camera display has parking guide lines that indicate distance from your vehicle.

1st Line	24in (0.6m)
2nd Line	39in (1m)
3rd Line	79in (2m)
4th Line	118in (3m)

NOTE

- The rearview camera has a unique lens that makes objects appear closer than they actually are.
- The rearview camera display has a limited coverage, and the size and position of objects may appear different than they actually are. Make sure to check the surrounding area carefully.

To turn the guide line on and off, hold the power button for more than 3 seconds when the shift is in reverse, the on/off setting will be kept when you change gear and return to reverse.

Before you begin driving your vehicle, you should know what gasoline to use and how to check the levels of important fluids. You also need to know how to properly store luggage or packages. The information in this section will help you. If you plan to add any accessories to your vehicle, please read the information in this section first.

Break-in Period 352
Fuel Recommendation 352
Service Station Procedures 354
  Refueling..... 354
  Tighten Fuel Cap Message 355
  Opening and Closing the Hood..... 356
  Oil Check..... 357
  Engine Coolant Check 358
Fuel Economy..... 358
Accessories and Modifications 362
Carrying Cargo 365

Break-in Period
Help assure your vehicle's future reliability and performance by paying extra attention to how you drive during the first 600 miles (1,000 km). During this period:

- Avoid full-throttle starts and rapid acceleration.
- Avoid hard braking for the first 200 miles (300 km).
- Do not change the oil until the scheduled maintenance time.
- Do not tow a trailer.

You should also follow these recommendations with an overhauled or exchanged engine, or when the brakes are replaced.

Fuel Recommendation
Your vehicle is designed to operate on premium unleaded gasoline with a pump octane of 91 or higher. If this octane grade is unavailable, regular unleaded gasoline with a pump octane of 87 or higher may be used temporarily. The use of regular unleaded gasoline can cause metallic knocking noises in the engine and will result in decreased engine performance. The long-term use of regular-grade gasoline can lead to engine damage.

NOTICE

Avoid driving with an extremely low fuel level. Running out of fuel could cause the engine to misfire, damaging the catalytic converter.

NOTICE

To help prevent harmful fuel system and engine deposits, use high quality fuel containing detergent and additives. In addition, in order to maintain good performance, fuel economy, and emissions control, we strongly recommend the use of gasoline that does NOT contain harmful manganese-based fuel additives such as MMT, if such gasoline is available.

Use of gasoline with these additives may adversely affect performance, and cause the malfunction indicator lamp on your instrument panel to come on. If this happens, contact your dealer for service. Some gasoline today is blended with oxygenates such as ethanol. Your vehicle is designed to operate on oxygenated gasoline containing up to 10% ethanol by volume. Do not use gasoline containing methanol. If you notice any undesirable operating symptoms, try another service station or switch to another brand of gasoline.

Because the level of detergency and additives in gasoline vary in the market, Honda endorses the use of "TOP TIER Detergent Gasoline" where available to help maintain the performance and reliability of your vehicle. TOP TIER Detergent Gasoline meets a new gasoline standard jointly established by leading automotive manufacturers to meet the needs of today's advanced engines. Qualifying gasoline retailers will, in most cases, identify their gasoline as having met "TOP TIER Detergent Gasoline" standards at the retail location. This fuel is guaranteed to contain the proper level of detergent additives and be free of metallic additives. The proper level of detergent additives, and absence of harmful metallic additives in gasoline, help avoid build-up of deposits in your engine and emission control system.

For further important fuel-related information for your vehicle, or information on gasoline that does not contain MMT, visit My Acura at *owners.acura.com*. In Canada, visit *www.acura.ca* for additional information on gasoline. For more information on top tier gasoline, visit *www.toptiergas.com*.

Refueling

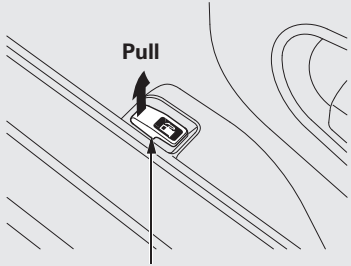

FUEL FILL DOOR RELEASE HANDLE

1. Park with the driver's side closest to the service station pump.
2. Open the fuel fill door by pulling on the handle at the outside of the driver's seat.

⚠WARNING

Gasoline is highly flammable and explosive. You can be burned or seriously injured when handling fuel.

- Stop the engine, and keep heat, sparks, and flame away.
- Handle fuel only outdoors.
- Wipe up spills immediately.

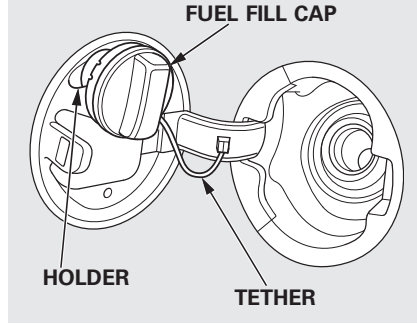

3. Remove the fuel fill cap slowly. You may hear a hissing sound as pressure inside the tank equalizes. Place the cap in the holder on the fuel fill door.
4. Stop filling the tank after the fuel nozzle automatically clicks off. Do not try to “top off” the tank. This leaves some room in the fuel tank for the fuel to expand with temperature changes.

   If the fuel nozzle keeps clicking off even though the tank is not full, there may be a problem with your vehicle's fuel vapor recovery system. The system helps keep fuel vapor from going into the atmosphere. Try filling at another pump. If this does not fix the problem, consult your dealer.

5. Screw the fuel fill cap back on until it clicks at least once. If you do not properly tighten the cap, you will see a “TIGHTEN FUEL CAP” message on the multi-information display (see right column on this page), and the malfunction indicator lamp may also come on (see page 466).
6. Push the fuel fill door closed until it latches.

Tighten Fuel Cap Message



If your fuel fill cap is loose or missing, a “TIGHTEN FUEL CAP” message appears on the multi-information display after you start the engine.

Turn the engine off, and confirm the fuel fill cap is installed. If it is, loosen it, then retighten it until it clicks at least once. When you can restart the engine, the message appears again. The message goes off after several days of normal driving once you tighten or replace the fuel fill cap. To scroll to another message, press the INFO (▲/▼) button.

If the system still detects a leak in your vehicle's evaporative emissions system, the malfunction indicator lamp (MIL) comes on. If the fuel fill cap was not already tightened, turn the engine off, and check or retighten the fuel fill cap until it clicks at least once. The MIL should go off after several days of normal driving once the cap is tightened or replaced. If the MIL does not go off, have your vehicle inspected by a dealer. For more information, see page 466.

Opening and Closing the Hood



1. Park the vehicle, and set the parking brake. Pull the hood release handle located under the lower left corner of the dashboard. The hood will pop up slightly.

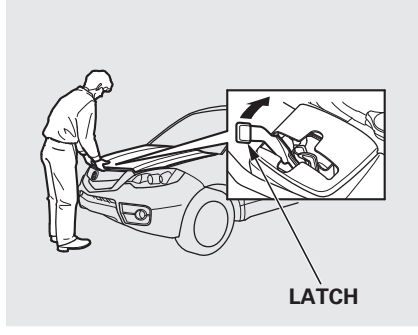

2. Put your fingers under the front edge of the hood near the center. Slide your hand to the left until you feel the hood latch handle. Push this handle up to release it. Lift up the hood.

If the hood latch handle moves stiffly, or if you can open the hood without lifting the handle, the mechanism should be cleaned and lubricated.

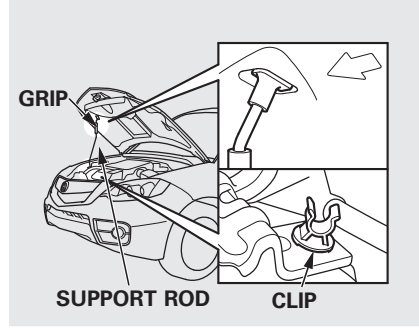

3. Holding the grip, pull the support rod out of its clip. Insert the end into the designated hole in the hood.

To close the hood, lift it up slightly to remove the support rod from the hole. Put the support rod back into its holding clip. Lower the hood to about a foot (30 cm) above the fender, then let it drop. Make sure it is securely latched.

Oil Check

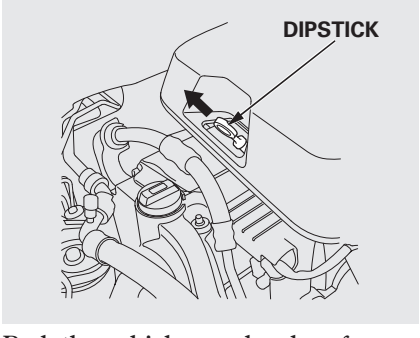

Park the vehicle on a level surface. Wait a few minutes after turning the engine off before you check the oil.

1. Remove the dipstick (orange loop).
2. Wipe off the dipstick with a clean cloth or paper towel.
3. Hold the dipstick with a clean cloth or paper towel, and then insert it all the way back in its hole.

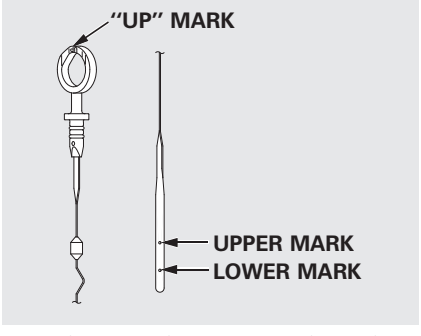

Make sure the "UP" mark on the loop is facing up when you insert the dipstick.

4. Remove the dipstick again, and check the level. It should be between the upper and lower marks.

If it is near or below the lower mark, see **Adding Engine Oil** on page 420.

Engine Coolant Check

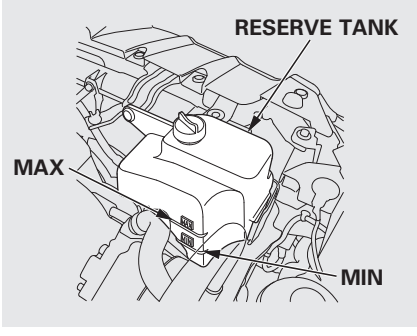

Look at the coolant level in the radiator reserve tank. Make sure it is between the MAX and MIN lines. If it is below the MIN line, see **Adding Engine Coolant** on page 424 for information on adding the proper coolant.

Refer to **Owner's Maintenance Checks** on page 417 for information about checking other items on your vehicle.

Actual Mileage and EPA Fuel Economy Estimates Comparison. Fuel economy is not a fixed number. It varies based on driving conditions, driving habits and vehicle condition. Therefore, it is not possible for one set of estimates to predict fuel economy precisely for all drivers in all environments.

The EPA fuel economy estimates shown in the example to the right are a useful tool for comparison when buying a vehicle. EPA estimates include:

City MPG – Represents urban driving in a vehicle in light traffic. A range of miles per gallon achieved is also provided.

Highway MPG – Represents a mixture of rural and interstate driving, in a warmed-up vehicle, typical of longer trips in free-flowing traffic. A range of miles per gallon achieved is also provided.

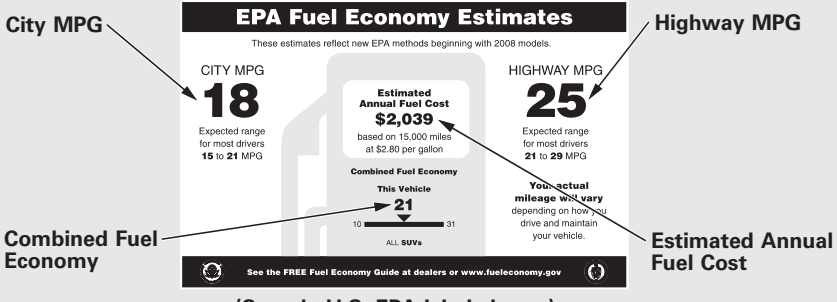

(Sample U.S. EPA label shown)

Combined Fuel Economy – Represents a combination of city and highway driving. The scale represents the range of combined fuel economy for other vehicles in the class.

Estimated Annual Fuel Cost – Provides an estimated annual fuel cost, based on 15,000 miles (20,000 km) per year multiplied by the cost per gallon (based on EPA fuel cost data) divided by the combined fuel economy.

For more information on fuel economy ratings and factors that affect fuel economy, visit *www.fueleconomy.gov* (Canada: Visit *www.vehicles.gc.ca*)

Fuel Economy Factors
The following factors can lower your vehicle's fuel economy:

- Aggressive driving (hard acceleration and braking)
- Excessive idling, accelerating and braking in stop-and-go traffic
- Cold engine operation (engines are more efficient when warmed up)
- Driving with a heavy load or the air conditioner running
- Improperly inflated tires

CONTINUED

Improving Fuel Economy

Vehicle Maintenance

A properly maintained vehicle maximizes fuel economy. Poor maintenance can significantly reduce fuel economy. Always maintain your vehicle according to the maintenance messages displayed on the information display (see **Owner's Maintenance Checks** on page 417). For example:

- **Use the required engine oil (see page 420).**
- **Maintain proper tire inflation** – An underinflated tire increases "rolling resistance," which reduces fuel economy.
- **Avoid carrying excess weight in your vehicle** – It puts a heavier load on the engine, increasing fuel consumption.
- **Keep your vehicle clean** – In particular, a build-up of snow or mud on your vehicle's underside adds weight and rolling resistance. Frequent cleaning helps your fuel economy.

Drive Efficiently

- **Drive moderately** – Rapid acceleration, abrupt cornering, and hard braking increase fuel consumption.
- **Observe the speed limit** – Aerodynamic drag has a big effect on fuel economy at speeds above 45 mph (75 km/h). Reduce your speed and you reduce the drag. Trailers, car top carriers, roof racks and bike racks are also big contributors to increased drag.

- **Always drive in the highest gear possible** – If your vehicle has a manual transmission, you can boost your fuel economy by up shifting as early as possible.
- **Avoid excessive idling** – Idling results in 0 miles per gallon (0 kms per liter).
- **Minimize the use of the air conditioning system** – The A/C puts an extra load on the engine which makes it use more fuel. Use the fresh-air ventilation when possible.
- **Plan and combine trips** – Combine several short trips into one. A warmed-up engine is more fuel efficient than a cold one.

Calculating Fuel Economy

Measuring Techniques

Direct calculation is the recommended source of information about your actual fuel economy. Using frequency of fill-ups or taking fuel gauge readings are NOT accurate measures of fuel economy. Fuel economy may improve over the first several thousand miles.

CONTINUED

Checking Your Fuel Economy

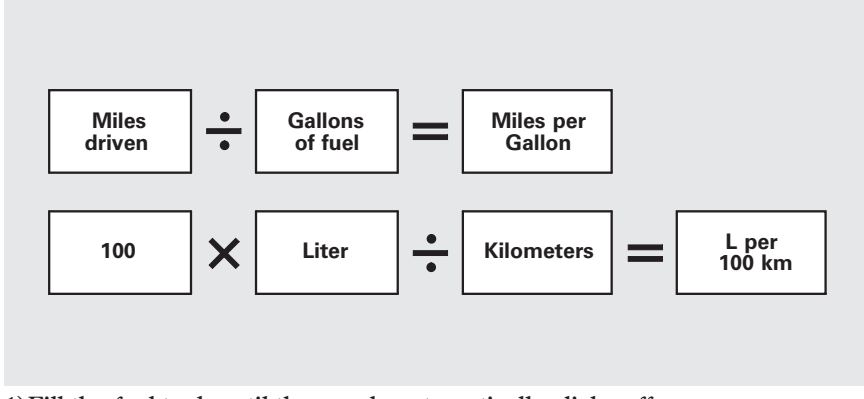

1) Fill the fuel tank until the nozzle automatically clicks off.
2) Reset trip counter to zero.
3) Record the total gallons (liters) needed to refill.
4) Follow one of the simple calculations above.

Accessories and Modifications

Modifying your vehicle, or installing non-Acura accessories, may make your vehicle unsafe. Before you make any modifications or add any accessories, be sure to read the following information.

Accessories

Your dealer has Acura accessories that allow you to personalize your vehicle. These accessories have been designed and approved for your vehicle, and are covered by warranty.

Although non-Acura accessories may fit on your vehicle, they may not meet factory specifications, and could adversely affect your vehicle's handling, stability, and reliability.

⚠WARNING

Improper accessories or modifications can affect your vehicle's handling, stability, and performance, and cause a crash in which you can be hurt or killed.

Follow all instructions in this owner's manual regarding accessories and modifications.

When properly installed, cellular phones, alarms, two-way radios, and low-powered audio systems should not interfere with your vehicle's computer controlled systems, such as your airbags, anti-lock brakes, and tire pressure monitoring system.

Before installing any accessory:

- Make sure the accessory does not obscure any lights, or interfere with proper vehicle operation or performance.
- Be sure electronic accessories do not overload electrical circuits (see page 469) or interfere with proper operation of your vehicle.
- Before installing any electronic accessory, have the installer contact your dealer for assistance. If possible, have your dealer inspect the final installation.
- Do not install accessories on the side pillars or across the rear windows. Accessories installed in these areas may interfere with proper operation of the side curtain airbags.

Modifying Your Vehicle

Removing parts from your vehicle, or replacing components with non-Acura components could seriously affect your vehicle's handling, stability, and reliability.

Here are some examples:

- Lowering the vehicle with a non-Acura suspension kit that significantly reduces ground clearance can allow the undercarriage to hit speed bumps or other raised objects, which could cause the airbags to deploy.
- Raising your vehicle with a non-Acura suspension kit can affect the handling, stability, and reliability.

CONTINUED

- Non-Acura wheels, because they are a universal design, can cause excessive stress on suspension components and will not be compatible with the tire pressure monitoring system (TPMS).
- Larger or smaller wheels and tires can interfere with the operation of your vehicle's anti-lock brakes and other systems.
- Modifying your steering wheel or any other part of your vehicle's safety features can make the systems ineffective.

If you plan to modify your vehicle, consult your dealer.

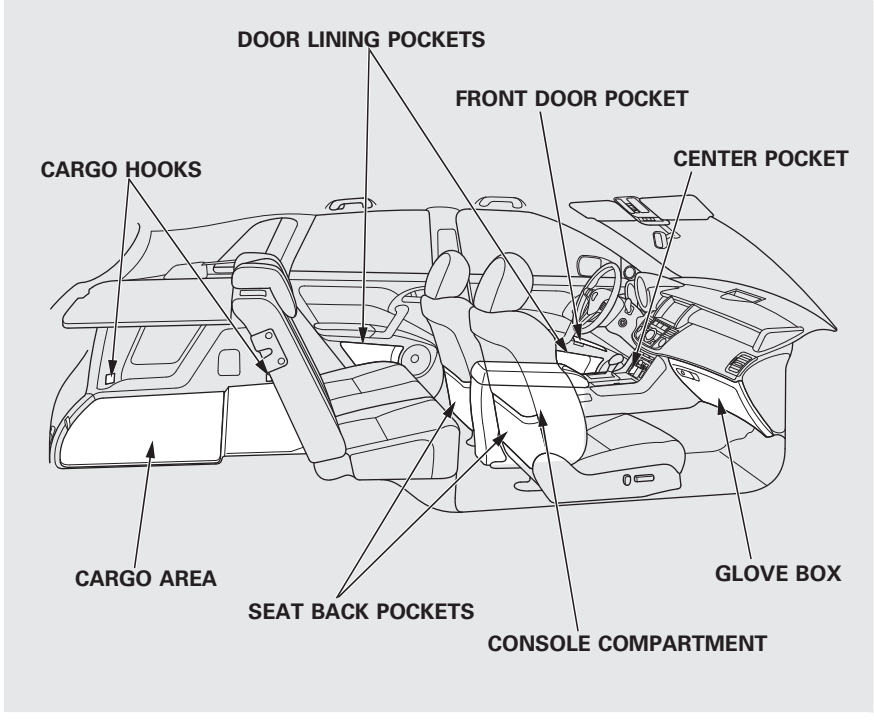

Your vehicle has several convenient storage areas:

- Glove box
- Front door pockets
- Door lining pockets
- Seat-back pockets
- Center pocket
- Console compartment
- Cargo area, including the rear seats when folded down.
- Roof-rack (if equipped)

However, carrying too much cargo, or improperly storing it, can affect your vehicle's handling, stability, stopping distance, and tires, and make it unsafe. Before carrying any type of cargo, be sure to read the following pages.

CONTINUED

Load Limits
The maximum load for your vehicle is 870 lbs (395 kg).

See Tire And Loading Information label attached to the driver's doorjamb.

Label Example

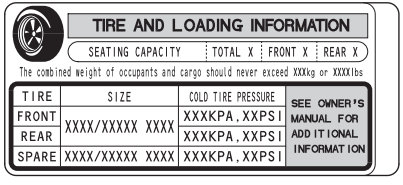

This figure includes the total weight of all occupants, cargo, and accessories, and the tongue load if you are towing a trailer.

⚠WARNING

Overloading or improper loading can affect handling and stability and cause a crash in which you can be hurt or killed.

Follow all load limits and other loading guidelines in this manual.

Steps for Determining Correct Load Limit –

1. Locate the statement "The combined weight of occupants and cargo should never exceed XXX kg or XXX lbs." on your vehicle's placard.
2. Determine the combined weight of the driver and passengers that will be riding in your vehicle.
3. Subtract the combined weight of the driver and passengers from XXX kg or XXX lbs.
4. The resulting figure equals the available amount of cargo and luggage load capacity. For example, if the "XXX" amount equals 1,400 lbs. and there will be five 150 lb. passengers in your vehicle, the amount of available cargo and luggage load capacity is 650 lbs.
   (1,400 − 750 (5 × 150) = 650 lbs.)

5. Determine the combined weight of luggage and cargo being loaded on the vehicle. That weight may not safely exceed the available cargo and luggage load capacity calculated in Step 4.
6. If your vehicle will be towing a trailer, load from your trailer will be transferred to your vehicle. Consult this manual to determine how this reduces the available cargo and luggage load capacity of your vehicle.

	Max Load		Passenger Weight		Cargo Weight
Example 1		≧		+	
	(870 lbs) (395 kg)		(150 lbs x 2 = 300 lbs) (68 kg x 2 = 136 kg)		(570 lbs) (259 kg)
Example 2		≧		+	
	(870 lbs) (395 kg)		(150 lbs x 4 = 600 lbs) (68 kg x 4 = 272 kg)		(270 lbs) (123 kg)
Example 3		≧		+	
	(870 lbs) (395 kg)		(150 lbs x 5 = 750 lbs) (68 kg x 5 = 340 kg)		(120 lbs) (55 kg)

In addition, the total weight of the vehicle, all occupants, accessories, cargo, and trailer tongue load must not exceed the Gross Vehicle Weight Rating (GVWR) or the Gross Axle Weight Rating (GAWR). Both are on a label on the driver's doorjamb.

CONTINUED

Carrying Cargo in the Passenger Compartment

- Store or secure all items that could be thrown around and hurt someone during a crash.
- Be sure items placed on the floor behind the front seats cannot roll underneath and interfere with the proper operation of the seats, the sensors under the seats, or the driver's ability to operate the pedals.
- If you fold the rear seats down, tie down items that could be thrown about the vehicle during a crash or sudden stop. Also, keep all cargo below the bottom of the windows. If it is higher, it could interfere with the proper operation of the side curtain airbags.
- Keep the glove box closed while driving. If it is open, a passenger could injure their knees during a crash or sudden stop.
- Do not put any items on top of the cargo area cover. They can block your view and be thrown around the vehicle during a crash.

Carrying Cargo in the Cargo Area or on a Roof Rack

- Distribute cargo evenly on the floor of the cargo area, placing the heaviest items on the bottom and as far forward as possible. Tie down items that could be thrown about the vehicle during a crash or sudden stop.
- If you fold the rear seats down, tie down items that could be thrown about the vehicle during a crash or sudden stop. Keep all cargo below the bottom of the windows. If it is higher, it could interfere with the proper operation of the side curtain airbags.

- If you carry large items that prevent you from closing the tailgate, exhaust gas can enter the passenger area. To avoid the possibility of **carbon monoxide poisoning,** follow the instructions on page 57.
- If you carry any items on a roof rack, be sure the total weight of the rack and the items does not exceed 110 lbs (50 kg).

Cargo Hooks/Hanger Bars

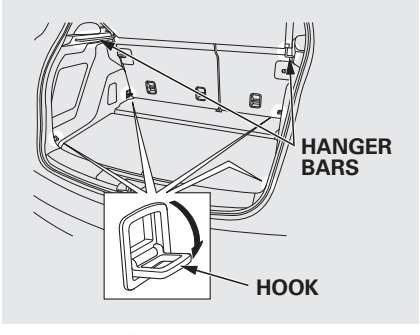

To secure the cargo, you can use the four cargo hooks in the cargo area. The illustration shows the location of each cargo hook.

The cargo hooks on the floor can be used to install the cargo net for securing items.

The hanger bars can be used to hang items. The hanger bar is designed to hang light items (maximum load: 11 lbs or 5 kg on each side). Heavy items may damage the bars.

CONTINUED

Optional Cargo Net
The cargo net can be used to help hold down light items in the cargo area. The cargo net may not prevent heavy items from being thrown forward in a crash or a sudden stop. Heavy items should be secured to the cargo area floor with the hooks or cinch straps attached to the cargo hooks.

This section gives you tips on starting the engine under various conditions, and how to operate the automatic transmission. It also includes important information on parking your vehicle, the braking system, the Super Handling-All Wheel Drive™ (SH-AWD®) system, the vehicle stability assist (VSA®) system, the tire pressure monitoring system (TPMS), and facts you need if you are planning to tow a trailer or drive off-highway.

Driving Guidelines 372
Preparing to Drive 373
Starting the Engine 374
Automatic Transmission 376
Driving with the Paddle Shifters 380
Super Handling-All Wheel Drive™ (SH-AWD®) System 384
Parking 386
Braking System 387
Anti-lock Brakes (ABS) 388
Tire Pressure Monitoring System (TPMS) 390
Vehicle Stability Assist (VSA®), aka Electronic Stability Control (ESC), System 395
Towing a Trailer 397
Off-Highway Driving Guidelines 405

Your vehicle has higher ground clearance that allows you to travel over bumps, obstacles, and rough terrain. It also provides good visibility so you can anticipate problems earlier.

Because your vehicle rides higher off the ground, it has a high center of gravity that can cause it to roll over if you make abrupt turns. Utility vehicles have a significantly higher roll over rate than other types of vehicles.

To prevent rollovers or loss of control:

- Take corners at slower speeds than you would with a passenger vehicle.
- Avoid sharp turns and abrupt maneuvers whenever possible.
- Do not modify your vehicle in any way that would raise the center of gravity.
- Do not carry heavy cargo on the roof.

Your vehicle is equipped with a super handling-all wheel drive (SH-AWD) system. When the system senses a loss of one or more wheel traction, it automatically transfers some power to the other wheels. This gives you better traction and mobility.

You still need to exercise the same care when accelerating, steering, and braking that you would in a two-wheel drive vehicle.

See page 405 for off-highway driving guidelines.

You should do these checks and adjustments before you drive your vehicle:

1. Make sure all windows, mirrors, and outside lights are clean and unobstructed. Remove frost, snow, or ice.
2. Check that the hood is fully closed.
3. Visually check the tires. If a tire looks low, use a gauge to check its pressure.
4. Check that any items you may be carrying are stored properly or fastened down securely.
5. Check the seat adjustment (see page 134).
6. Check the adjustment of the inside and outside mirrors (see page 146).
7. Check the steering wheel adjustment (see page 122).
8. Make sure the doors and the tailgate are securely closed and locked.
9. Fasten your seat belt. Check that your passengers have fastened their seat belts (see page 15).
10. When you start the engine, check the gauges and indicators in the instrument panel, and the messages on the multi-information display (see pages 63, 73 and 74).

Your vehicle's starting system has an auto control mode. When you turn the ignition switch to the START (III) position, this feature keeps the engine's starter motor running until the engine starts. Follow these instructions to start the engine:

1. Apply the parking brake.
2. In cold weather, turn off all electrical accessories to reduce the drain on the battery.
3. Make sure the shift lever is in Park. Press on the brake pedal.
4. Without touching the accelerator pedal, turn the ignition switch to the START (III) position, then release the ignition switch. You do not need to hold the ignition switch in the START (III) position to start the engine. The starter motor can run for up to 9 seconds to guarantee starting when the outside temperature is very low.

   If you hold the ignition switch in the START (III) position for more than 7 seconds, the starter motor, depending on the outside temperature, runs for up to 25 seconds until the engine starts.

   If the engine does not start, wait at least 10 seconds before trying again.

NOTICE

The immobilizer system protects your vehicle from theft. If an improperly coded key (or other device) is used, the engine's fuel system is disabled. For more information, see page 124.

NOTICE

The engine is harder to start in cold weather. Also, the thinner air found at altitudes above 8,000 feet (2,400 meters) adds to this problem.

Your vehicle has an electric vacuum pump located in the engine compartment. When you drive in cold weather or thinner air at high altitude, the electric vacuum pump operates more frequently after the engine is started.

When the electric vacuum pump is in operation, it makes some mechanical noises come from the engine compartment. This is normal.

Check Starter System Message

U.S.



If there is a problem with the starter system, you will see a “CHECK STARTER SYSTEM” message on the multi-information display when the ignition switch is turned to the ON (II) position. You will also see this message when the auto control mode of the starter system has a problem.

Canada



If this message is on, the ignition switch has to be held in the START (III) position manually until the engine starts. The ignition switch can be held in that position up to 15 seconds.

Even though you may be able to start the engine manually without the auto control mode of the starter system, have your dealer inspect your vehicle.

Shift Lever Position Indicators

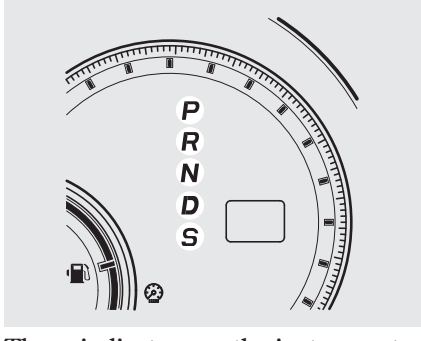

These indicators on the instrument panel show which position the shift lever is in.

The “D” indicator comes on for a few seconds when you turn the ignition switch to the ON (II) position. If it flashes while driving (in any shift position), it indicates a possible problem in the transmission.

If the malfunction indicator lamp comes on along with the “D” indicator, there is a problem with the automatic transmission control system. Avoid rapid acceleration, and have the transmission checked by your dealer as soon as possible.

When the “D” indicator warns of a possible problem with the transmission, you will see a “CHECK TRANSMISSION” message on the multi-information display (see page 80).

Shifting

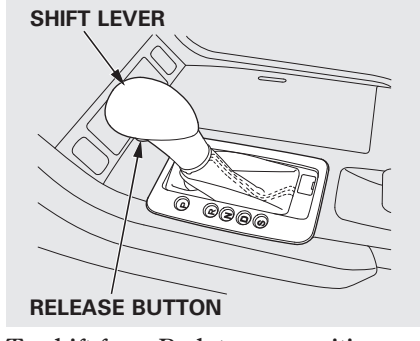

To shift from Park to any position, press firmly on the brake pedal and press the release button on the front of the shift lever, then pull the lever. You cannot shift out of Park when the ignition switch is in the LOCK (0) or the ACCESSORY (I) position.

To shift from:	Do this:
P to R	Press the brake pedal, and press the shift lever release button.
R to P N to R D to S	Press the shift lever release button.
S to D D to N N to D R to N	Move the shift lever.

Park (P) – This position mechanically locks the transmission. Use Park whenever you are turning off or starting the engine. To shift out of Park, you must press on the brake pedal and have your foot off the accelerator pedal. Press the release button on the front of the shift lever to move it.

If you have done all of the above and still cannot move the lever out of Park, see **Shift Lock Release** on page 379.

To avoid transmission damage, come to a complete stop before shifting into Park. You must also press the release button to shift into Park. The shift lever must be in Park before you can remove the key from the ignition switch.

Reverse (R) – Press the brake pedal and press the release button on the front of the shift lever to shift from Park to reverse. To shift from reverse to neutral, come to a complete stop, and then shift. Press the release button before shifting into reverse from neutral.

Neutral (N) – Use neutral if you need to restart a stalled engine, or if it is necessary to stop briefly with the engine idling. Shift to the Park position if you need to leave your vehicle for any reason. Press on the brake pedal when you are moving the shift lever from neutral to another gear.

CONTINUED

Drive (D) – Use this position for your normal driving. The transmission automatically adjusts to keep the engine at the best speed for the driving conditions.

S Position (S) – To shift into the S position, press the release button on the front of the shift lever, and move the lever to S. This position is similar to D, except only gears from first to fourth are selected. The S position keeps the transmission from cycling between fourth and fifth gears in stop-and-go driving.

With the shift lever in D or S, you can also use the paddle shifters to shift the transmission up or down. Once you begin to use the paddle shifters in S, the transmission will no longer upshift or downshift automatically. For more information of driving with the paddle shifters, see page 380.

Engine Speed Limiter
If you exceed the maximum speed for the gear you are in, the engine speed will enter into the tachometer's red zone. If this occurs, you may feel the engine cut in and out. This is caused by a limiter in the engine's computer controls. The engine will run normally when you reduce the rpm below the red zone.

Shift Lock Release
This allows you to move the shift lever out of Park if the normal method of pushing on the brake pedal and pressing the release button does not work.

1. Set the parking brake.
2. Remove the key from the ignition switch.
3. Put a cloth on the notch of the shift lock release slot cover to prevent scratches. Using a small flat-tip screwdriver or a metal fingernail file, carefully pry on the notch of the cover to remove it.

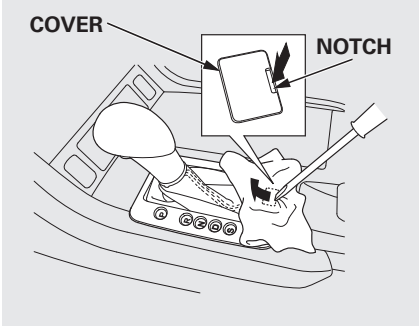

4. Insert the key in the shift lock release slot.
5. Push down on the key while you press the release button on the shift lever and move the shift lever out of Park to neutral.

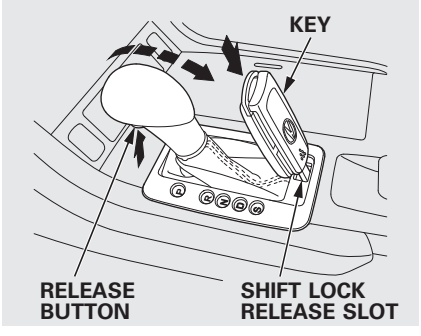

6. Remove the key from the shift lock release slot, then install the cover. Make sure the notch on the cover is on the rear.
   Insert the key back into the ignition switch, press the brake pedal, and restart the engine.

If you need to use the shift lock release, it means your vehicle is developing a problem. Have it checked by your dealer

Using the Paddle Shifters in the D position (D-Paddle Shift Mode)
When you are driving in the D position, pulling either paddle shifter switches from D-normal drive mode, to D-paddle shift mode. You can shift the transmission up or down manually with the paddle shifters.

Downshifting gives you more power when climbing, and provides engine braking when going down a steep hill.

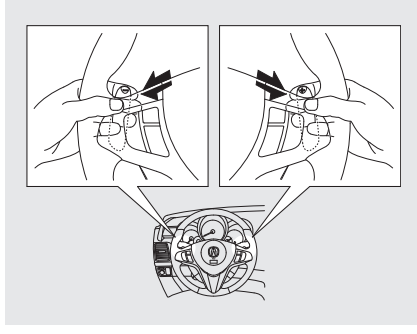

To shift up or down, use the + (right) or − (left) paddle shifter on either side of the steering wheel.

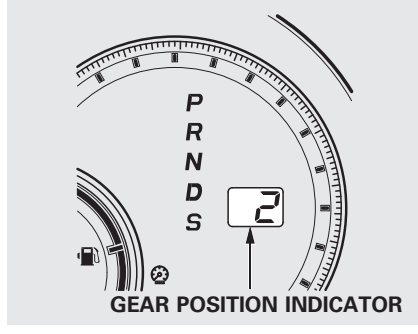

GEAR POSITION INDICATOR

Each time you pull + (right), the transmission shifts to a higher gear. Pull − (left) to downshift. You will see the selected gear number on the instrument panel.

When you pull either paddle shifter, the gear position indicator shows you the selected gear number.

The transmission control system monitors the accelerator pedal use and your driving conditions. When you press the accelerator pedal as in normal driving, the system judges that you are driving at a constant cruising speed without using the paddle shifters. Under these conditions, D-paddle shift mode is canceled, and the transmission automatically returns to drive mode (D).

When the transmission returns to drive mode (D), the displayed gear number disappears.

The transmission remains in the selected gear if you do not accelerate.

Each time you pull either paddle shifter, the transmission shifts one gear up or down. If you want to shift up or down more than two gears, pull the paddle shifter twice, pause, and then pull it again.

The automatic transmission will not allow you to shift up or down if:

- You downshift before the engine speed reaches the highest threshold of the lower gear.

  If you try to do this, the gear position indicator will flash the number of the lower gear several times, then return to a higher gear.
- You upshift before the engine speed reaches the lowest threshold of the higher gear.
- You pull both paddle shifters at the same time.
- You pull one of the two paddle shifters while continuously pulling on the other one.

The transmission downshifts to first gear and returns to drive mode (D) when the vehicle comes to a complete stop or the vehicle speed is about 6 mph (10 km/h).

If there is a problem in the transmission while you are driving with the paddle shifters, the D indicator flashes, the D-paddle shift mode is canceled, and the transmission returns to drive mode (D).

CONTINUED

Using the Paddle Shifters in the S position (Sequential Shift Mode)
With the shift lever in the S position, you can select the sequential shift mode to shift gears; much like a manual transmission using the paddle shifters, but without a clutch pedal.

To enter the sequential shift mode, press the release button on the front of the shift lever, move the lever to the S position, then pull either paddle shifter. To cancel the sequential shift mode and return to the ordinary automatic transmission, move the shift lever from the S position. When moving the shift lever, be careful not to operate incorrectly. While you are driving in the sequential shift mode, the transmission will not automatically return to ordinary automatic transmission.

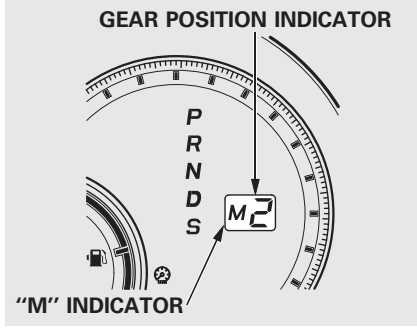

When you move the shift lever from "D" to "S" and pull either paddle shifter, the gear position indicator displays "M" along with the selected gear number.

To upshift, pull the + (right) paddle shifter. To downshift, pull the − (left) paddle shifter.

When you accelerate from a stop, the transmission starts in first gear, and you must manually upshift between first and fifth gears. Make sure you upshift before the engine speed reaches the tachometer's red zone.

The transmission remains in the selected gear (5, 4, 3, 2, or 1). There is no automatic downshift when you push the accelerator pedal to the floor.

When you are driving in 4th or 5th gear, the transmission downshifts to the lower gear under the following conditions:

- The vehicle slows down to a certain speed.
- You press the brake pedal.

Downshifting with the paddle shifter allows you to increase the engine braking when going down steep or long hills, and provides more power when climbing uphills. You can upshift the transmission manually to reduce the rpm.

The transmission also shifts automatically as the vehicle comes to a complete stop. It downshifts to first gear when the vehicle speed reaches 6 mph (10 km/h) or less.

The automatic transmission will not allow you to shift up or down if:

- You downshift before the engine speed reaches the highest threshold of the lower gear.

  If you try to do this, the gear position indicator will flash the number of the lower gear several times, then return to a higher gear.
- You upshift before the engine speed reaches the lowest threshold of the higher gear.
- You try to shift to third or a higher gear when the vehicle is stationary.
- You pull both paddle shifters at the same time.
- You pull one of the two paddle shifters while continuously pulling on the other one.

Starting in Second Gear

When you are in sequential shift mode, and the vehicle is stopped, pull the + (right) paddle shifter to shift to second gear. You will see "M2" in the display. Starting in second gear helps to reduce wheelspin in deep snow or on a slippery surface.

CONTINUED

Recommended Shift Points

Drive in the highest gear that lets the engine run and accelerate smoothly. This will give you good fuel economy and effective emissions control. The following shift points are recommended:

Shift up	Normal acceleration
1st to 2nd	15 mph (24 km/h)
2nd to 3rd	25mph (40 km/h)
3rd to 4th	40 mph (64 km/h)
4th to 5th	47 mph (76 km/h)

Super Handling-All Wheel Drive™ (SH-AWD®) System

If equipped

The super handling-all wheel drive (SH-AWD) system is a full time all-wheel-drive system that automatically controls and transfers varying amounts of engine torque to all wheels independently, according to the driving conditions.

While the SH-AWD system helps to enhance the vehicle's driving stability in all situations, it is still your responsibility to drive and corner at reasonable speeds and to leave a sufficient margin of safety.

SH-AWD Torque Distribution Monitor

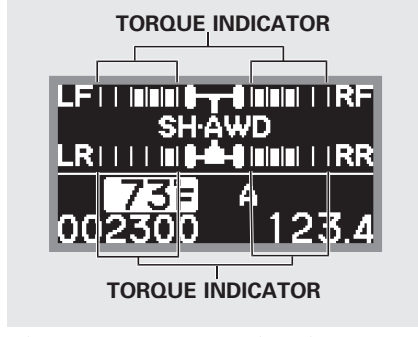

The SH-AWD torque distribution monitor on the multi-information display shows you the amount of torque being sent to the wheels. Each wheel − right front (RF), left front (LF), right rear (RR), and left rear (LR) − has its own torque indicator.

Each torque indicator is displayed as a bar graph divided into 5 segments. The number of segments represents the amount of torque distributed to each wheel.

When there is only a slight change in torque distribution while driving, such as cruising on level roads at the same speed, the torque distribution monitor may stop displaying the amount of torque. This is not a system problem. The monitor will show the amount if the system senses any change in torque distribution.



If the SH-AWD indicator blinks while driving, it indicates the differential temperature is too high. You will also see an “SH-AWD DIFF TEMP HIGH” message on the multi-information display. If this happens, pull to the side of the road when it is safe, shift to Park, and let the engine idle until the indicator goes out. If the indicator does not go out, take your vehicle to a dealer to have it checked.



If the SH-AWD indicator on the instrument panel stays on, and the “CHECK SH-AWD SYSTEM” message also appears on the multi-information display, there is a problem with the SH-AWD system.

Your vehicle still has normal front-wheel drive with vehicle stability assist (VSA), but does not have the advantages of SH-AWD. Have your vehicle checked by a dealer as soon as possible.

Always use the parking brake when you park your vehicle. Make sure the parking brake is set firmly, or your vehicle may roll if it is parked on an incline.

Set the parking brake before you put the transmission in Park. This keeps the vehicle from moving and putting pressure on the parking mechanism in the transmission.

Parking Tips

- Make sure the moonroof and the windows are closed.
- Turn off the lights.
- Place any packages, valuables, etc. in the cargo area or take them with you.
- Lock the doors and the tailgate.
- Never park over dry leaves, tall grass, or other flammable materials. The hot three way catalytic converter could cause these materials to catch on fire.
- If the vehicle is facing uphill, turn the front wheels away from the curb.
- If the vehicle is facing downhill, turn the front wheels toward the curb.
- Check the indicator on the instrument panel to verify that the security system is set.
- Make sure the parking brake is fully released before driving away. Driving with the parking brake partially set can overheat or damage the rear brakes.

Your vehicle is equipped with disc brakes at all four wheels. A power assist using negative pressure generated by the engine and the electric vacuum pump helps reduce the effort needed on the brake pedal. The anti-lock brake system (ABS) helps you retain steering control when braking very hard.

When the electric vacuum pump is in operation, it makes some mechanical noises come from the engine compartment. This is normal.

When you drive in cold weather or thinner air at high altitude, the electric vacuum pump operates more frequently after the engine is started.

For more information about the electric vacuum pump, see page 468.

Resting your foot on the pedal keeps the brakes applied lightly, builds up heat, and reduces their effectiveness and reduces brake pad life. In addition, fuel economy can be reduced. It also keeps your brake lights on all the time, confusing drivers behind you.

Constant application of the brakes when going down a long hill builds up heat and reduces their effectiveness. Use the engine to assist the brakes by taking your foot off the accelerator and downshifting to a lower gear.

Check your brakes after driving through deep water. Apply the brakes moderately to see if they feel normal. If not, apply them gently and frequently until they do. Be extra cautious and alert in your driving.

Braking System Design
The hydraulic system that operates the brakes has two separate circuits. Each circuit works diagonally across the vehicle (the left-front brake is connected with the right-rear brake, etc.). If one circuit should develop a problem, you will still have braking at two wheels.

Brake Pad Wear Indicators
All four brakes have audible brake wear indicators.

If the brake pads need replacing, you will hear a distinctive, metallic screeching sound when you apply the brake pedal. If you do not have the brake pads replaced, they will screech all the time. It is normal for the brakes to occasionally squeal or squeak when you apply them.

The anti-lock brake system (ABS) helps prevent the wheels from locking up, and helps you retain steering control by pumping the brakes rapidly, much faster than a person can do it.

The electronic brake distribution (EBD) system, which is part of the ABS, also balances the front-to-rear braking distribution according to vehicle loading.

You should never pump the brake pedal. Let the ABS work for you by always keeping firm, steady pressure on the brake pedal. This is sometimes referred to as "stomp and steer."

You will feel a pulsation in the brake pedal when the ABS activates, and you may hear some noise. This is normal: it is the ABS rapidly pumping the brakes. On dry pavement, you will need to press on the brake pedal very hard before the ABS activates. However, you may feel the ABS activate immediately if you are trying to stop on snow or ice.



ABS Indicator

If this indicator comes on, the anti-lock function of the braking system has shut down. The brakes still work like a conventional system, but without anti-lock. You should have your dealer inspect your vehicle as soon as possible.

You will also see a "CHECK ABS SYSTEM" message on the multi-information display (see page 80).

If the indicator comes on while driving, test the brakes as instructed on page 467.

If the ABS indicator and the brake system indicator come on together, and the parking brake is fully released, the EBD system may also be shut down.

Test your brakes as instructed on page 467. If the brakes feel normal, drive slowly and have your vehicle repaired by your dealer as soon as possible. Avoid sudden hard braking which could cause the rear wheels to lock up and possibly lead to a loss of control.

Important Safety Reminders
ABS does not reduce the time or distance it takes to stop the vehicle. It only helps with the steering control during braking.

ABS will not prevent a skid that results from changing direction abruptly, such as trying to take a corner too fast or making a sudden lane change. Always drive at a safe speed for the road and weather conditions.

ABS cannot prevent a loss of stability. Always steer moderately when you are braking hard. Severe or sharp steering wheel movement can still cause your vehicle to veer into oncoming traffic or off the road.

A vehicle with ABS may require a longer distance to stop on loose or uneven surfaces, such as gravel or snow, than a vehicle without anti-lock.

Your vehicle is equipped with a tire pressure monitoring system (TPMS) that turns on every time you start the engine and monitors the pressure in your tires while driving.

Each tire has its own pressure sensor. If the air pressure of a tire becomes significantly low, the sensor in that tire immediately sends a signal that causes the low tire pressure/TPMS indicator in the instrument panel to come on. If this happens, you will see which tire is losing pressure on the multi-information display along with a “CHECK TIRE PRESSURE” message.



Low Tire Pressure/TPMS Indicator

When the low tire pressure/TPMS indicator is on, one or more of your tires is significantly underinflated. You should stop and check your tires as soon as possible, and inflate them to the proper pressure as indicated on the vehicle's tire information placard.

It is possible that the pressures shown on the multi-information display and the pressures you manually measure are slightly different.

If the difference is significant or you cannot make the low tire pressure/TPMS indicator and message on the multi-information display go out after inflating the tires to the specified values, have your dealer check the system as soon as possible.

If you think you can safely drive a short distance to a service station, proceed slowly to the station, then inflate the tire to the recommended pressure.

If the tire is flat, or if the tire pressure is too low to continue driving, replace the tire with the compact spare tire (see page 454).

Driving on a significantly under-inflated tire causes the tire to overheat and can lead to tire failure. Under-inflation also reduces fuel efficiency and tire tread life, and may affect the vehicle's handling and stopping ability.

Because tire pressure varies by temperature and other conditions, the low tire pressure/TPMS indicator may come on unexpectedly.

For example, if you check and fill your tires in a warm area, then drive in extremely cold weather, the tire pressure will be lower than measured and could be underinflated and cause the low tire pressure/ TPMS indicator to come on. Or, if you check and adjust your tire pressure in cooler conditions, and drive into extremely hot conditions, the tire may become overinflated. However, the low tire pressure/ TPMS indicator will not come on if the tires are overinflated.

Refer to page 444 for tire inflation guidelines.

If there is a problem with the TPMS, this indicator begins to flash. It stops flashing after approximately 1 minute, then stays on. You will also see a “CHECK TPMS SYSTEM” message on the multi-information display (see page 393).

Although your tire pressure is monitored, you must manually check the tire pressures monthly.

Each tire, including the spare, should be checked monthly when the vehicle is cold, and set to the recommended inflation pressure as specified on the vehicle placard and in the owner's manual (see page 445).

Tire Pressure Monitor

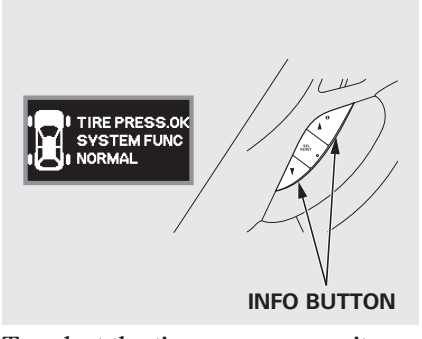

To select the tire pressure monitor, press the INFO button several times with the ignition switch in the ON (II) position.

You will see the above display on the multi-information display when all tire pressures are normal.

CONTINUED

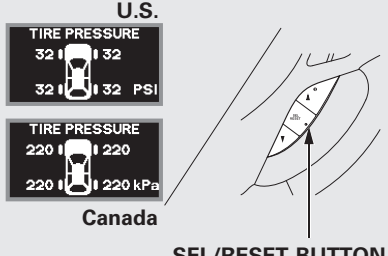

To see the inflation pressures of all four tires, press the SEL/RESET button. The display changes as shown above.

Each tire pressure is shown in PSI (U.S. models) or in kPa (Canadian models).



This shows that front left tire is losing pressure.

Each tire has its own pressure sensor. If the air pressure of a tire becomes significantly low, the sensor in that tire immediately sends a signal that causes the low tire pressure/TPMS indicator in the instrument panel to come on. If this happens, you will see which tire is losing pressure on the multi-information display along with a "CHECK TIRE PRESSURE" message.



When any of the tires have low pressure, the tire pressure monitor shows a "TIRE PRESS. ERROR SYSTEM FUNC NORMAL" message.
When you continue driving after installing the spare tire, you will also see this message on the multi-information display.

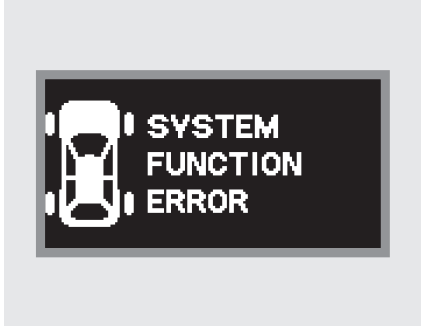

If there is a problem with the TPMS, the tire pressure monitor shows a “SYSTEM FUNCTION ERROR” message and the tire pressure readings are not displayed. If this happens, you will first see a system warning message “CHECK TPMS SYSTEM” on the multi-information display.

TPMS System Failure



If there is a problem with the TPMS, you will see the above message on the multi-information display.

If you see this message, the system is off and is not monitoring the tire pressures. Have the system checked by your dealer as soon as possible.

Also, the low tire pressure/TPMS indicator begins to flash (see page 71).

If the low tire pressure/TPMS indicator comes on, or the multi-information display shows a “CHECK TPMS SYSTEM” message, the VSA system automatically turns on even when the VSA system is turned off by pressing the VSA OFF switch (see page 396). If this happens, you cannot turn the VSA system off by pressing the VSA OFF switch again.

When you restart the vehicle with the compact spare tire, the TPMS system message will also be displayed on the multi-information display after several miles (kilometers) driving.

CONTINUED

Changing a Tire with TPMS
If you have a flat tire, the low tire pressure/TPMS and tire monitor indicators will come on. Replace the indicated flat tire with the compact spare tire (see page 454).

After the flat tire is replaced with the spare tire, the low tire pressure/ TPMS indicator stays on while driving. After several miles (kilometers) driving, this indicator begins to flash, then stays on again. You will also see a “CHECK TPMS SYSTEM” message on the multi-information display. This is normal; the system cannot monitor the spare tire pressure. Manually check the spare tire pressure to be sure it is correct.

This indicator and the warning message on the multi-information display will go off, after several miles (kilometers) driving, when the spare tire is replaced with the specified regular tire equipped with the tire pressure monitor sensor.

Each wheel is equipped with a tire pressure sensor. You must use TPMS specific wheels. It is recommended that you always have your tires serviced by your dealer or a qualified technician.

Never use a puncture-repairing agent in a flat tire. If used, you will have to replace the tire pressure sensor. Have the flat tire repaired by your dealer as soon as possible.

As required by the FCC:
This device complies with Part 15 of the FCC rules. Operation is subject to the following two conditions: (1) This device may not cause harmful interference, and (2) this device must accept any interference received, including interference that may cause undesired operation.

Changes or modifications not expressly approved by the party responsible for compliance could void the user's authority to operate the equipment.

This device complies with Industry Canada Standard RSS-210.
Operation is subject to the following two conditions: (1) this device may not cause interference, and (2) this device must accept any interference that may cause undesired operation of the device.

The vehicle stability assist (VSA) system helps to stabilize the vehicle during cornering if the vehicle turns more or less than desired. It also assists you in maintaining traction while accelerating on loose or slippery road surfaces. It does this by regulating the engine's output and by selectively applying the brakes.

When VSA activates, you may notice that the engine does not respond to the accelerator in the same way it does at other times. There may also be some noise from the VSA hydraulic system. You will also see the VSA system indicator blink.

The VSA system cannot enhance the vehicle's driving stability in all situations and does not control your vehicle's entire braking system. It is still your responsibility to drive and corner at reasonable speeds and to leave a sufficient margin of safety.



VSA OFF Indicator

When VSA is off, the VSA OFF indicator comes on as a reminder.



Vehicle Stability Assist (VSA) System Indicator

If this indicator comes on while driving, pull to the side of the road when it is safe, and turn off the engine. Reset the system by restarting the engine. If the VSA system indicator stays on or comes back on while driving, have the VSA system inspected by your dealer.

NOTE: The main function of the VSA system is generally known as Electronic Stability Control (ESC). The system also includes a traction control function.

If the indicator does not come on when the ignition switch is turned to the ON (II) position, there may be a problem with the VSA system. Have your dealer inspect your vehicle as soon as possible.

You will also see a “CHECK VSA SYSTEM” message on the multi-information display if there is a problem with the VSA system.

If the low tire pressure/TPMS indicator comes on (see page 390), or the multi-information display shows a “CHECK TPMS SYSTEM” message with the indicator flashing (see page 393), the VSA system automatically turns on even if the VSA system is turned off with the VSA OFF switch. In this case, you cannot turn the VSA system off by pressing the VSA OFF switch again.

CONTINUED

Without VSA, your vehicle will have normal braking and cornering ability, but it will not have VSA traction and stability enhancement.

VSA OFF Switch
In certain unusual conditions when your vehicle gets stuck in shallow mud or fresh snow, it may be easier to free it with the VSA temporarily switched off. When the VSA system is off, the traction control system is also off. You should only attempt to free your vehicle with the VSA off if you are not able to free it when the VSA is on.

Immediately after freeing your vehicle, be sure to switch the VSA on again. We do not recommend driving your vehicle with the VSA and traction control systems switched off.

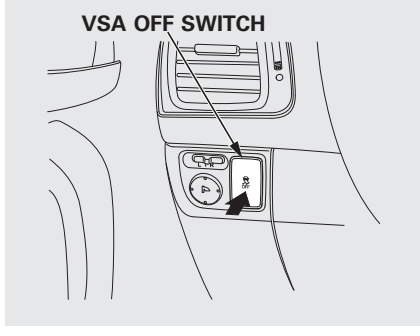

This switch is under the driver's side vent. To turn the VSA system on and off, press and hold it until you hear a beep.

When VSA is off, the VSA OFF indicator comes on as a reminder. Press and hold the switch again. It turns the system back on.

VSA is turned on every time you start the engine, even if you turned it off the last time you drove the vehicle.

VSA and Tire Sizes
Driving with varying tire or wheel sizes may cause the VSA to malfunction. When replacing tires, make sure they are the same size and type as your original tires (see page 448).

If you install winter tires, make sure they are the same size as those that were originally supplied with your vehicle. Exercise the same caution during winter driving as you would if your vehicle was not equipped with VSA.

Your vehicle has been designed primarily to carry passengers and their cargo. You can also use it to tow a trailer if you carefully observe the load limits, use the proper equipment, and follow the guidelines in this section.

Break-In Period
Avoid towing a trailer during your vehicle's first 600 miles (1,000 km) (see page 352).

Be sure to read the **Off-Highway Driving Guidelines** section on page 405 if you plan to tow off paved surfaces.

⚠WARNING

Exceeding any load limit or improperly loading your vehicle and trailer can cause a crash in which you can be seriously hurt or killed.

Check the loading of your vehicle and trailer carefully before starting to drive.

Load Limits



Total Trailer Weight: The maximum allowable weight of the trailer and everything in or on it must not exceed 1,500 lbs (680 kg). Towing a load that is too heavy can seriously affect your vehicle's handling and performance. It can also damage the engine and drivetrain.

CONTINUED

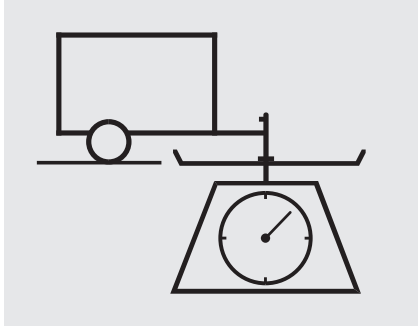

Tongue Load: The weight that the tongue of a fully-loaded trailer puts on the hitch should be approximately 10% of the total trailer weight. Too much tongue load reduces front-tire traction and steering control. Too little tongue load can make the trailer unstable and cause it to sway.

To achieve a proper tongue load, start by loading 60% of the load toward the front of the trailer and 40% toward the rear, then re-adjust the load as needed.

Gross Vehicle Weight Rating (GVWR) – The maximum allowable weight of the vehicle, all occupants, all accessories, all cargo, and the tongue load is :

SH-AWD:

4,894 lbs (2,220 kg)

2WD:

4,718 lbs (2,140 kg)

Gross Axle Weight Ratings (GAWR) – The maximum allowable weight of the vehicle axle is :

SH-AWD:

2,546 lbs (1,155 kg)
on the front axle
2,381 lbs (1,080 kg)
on the rear axle

2WD:

2,447 lbs (1,110 kg)
on the front axle
2,271 lbs (1,030 kg)
on the rear axle

Gross Combined Weight Rating (GCWR) – The maximum allowable weight of the fully loaded vehicle and trailer is :

SH-AWD:

6,394 lbs (2,900 kg)

2WD:

4,718 lbs (2,140 kg)

Checking Loads

The best way to confirm that all loads are within limits is to check them at a public scale. For public scales in your area, check your local phone book, or contact your trailer dealer or rental agency for assistance.

If you cannot get to a public scale, you can estimate the total trailer weight by adding the weight of your trailer (as quoted by the manufacturer) with everything in or on the trailer.

If you normally pull the same load each time you tow a trailer, you can use a suitable scale or a special tongue load gauge to check the tongue load the first time you set up a towing combination (a fully loaded vehicle and trailer), then recheck the tongue load whenever the conditions change.

Towing Equipment and Accessories

Towing can require a variety of equipment, depending on the size of your trailer, how it will be used, how much load you are towing, and where you tow.

Discuss your needs with your trailer sales or rental agency, and follow the guidelines in this section. Also make sure that all equipment is properly installed and maintained, and that it meets federal, state, provincial, territorial and local regulations.

Hitches

Any hitch used on your vehicle must be properly bolted to the underbody.

Safety Chains

Always use safety chains when you tow a trailer. Make sure the chains are secured to the trailer and hitch, and that they cross under the tongue and can catch the trailer if it becomes unhitched. Leave enough slack to allow the trailer to turn corners easily, but do not let the chains drag on the ground.

CONTINUED

Trailer Brakes

Acura recommends that any trailer with a total trailer weight of 1,000 lbs (450 kg) or more has its own brakes.

There are two common types of trailer brakes: surge and electric. Surge brakes are common for boat trailers, since the brakes will get wet.

If you choose electric brakes, be sure they are electronically actuated. Do not attempt to tap into your vehicle's hydraulic system. No matter how successful it may seem, any attempt to attach trailer brakes to your vehicle's hydraulic system will lower braking effectiveness and create a potential hazard.

See your trailer dealer or rental agency for more information on installing electric brakes.

Trailer Lights

Trailer lights and equipment must comply with federal, provincial, territorial, and local regulations. Check with your local trailer sales or rental agencies for the requirements in the area where you plan to tow, and use only equipment designed for your vehicle.

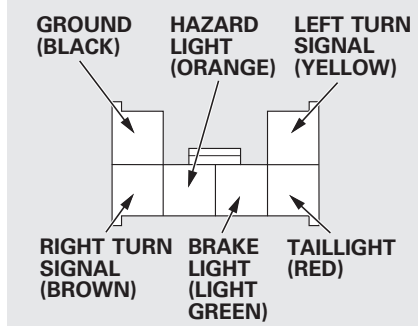

Your vehicle has a trailer lighting connector located under the right side tool case in the cargo area. Refer to the drawing above for the wiring color code and purpose of each pin.

Since lighting and wiring vary by trailer type and brand, you should have a qualified technician install a suitable connector between the vehicle and the trailer. Improper equipment or installation can cause damage to your vehicle's electrical system and affect your vehicle warranty.

Additional Towing Equipment

Many states, Canadian provinces and territories require special outside mirrors when towing a trailer. Even if they don't, you should install special mirrors if you cannot clearly see behind you, or if the trailer creates a blind spot.

Ask your trailer sales or rental agency if any other items are recommended or required for your towing situation.

Pre-Tow Checklist

When preparing to tow, and before driving away, be sure to check the following:

- The vehicle has been properly serviced, and the suspension, cooling system, and lights are in good operating condition.

CONTINUED

- The trailer has been properly serviced and is in good condition.
- All weights and loads are within limits.
- The hitch, safety chains, and any other attachments are secure.
- All items in or on the trailer are properly secured and cannot shift while you drive.
- The lights and brakes on your vehicle and the trailer are working properly.
- Your vehicle tires and spare are properly inflated, and the trailer tires and spare are inflated as recommended by the trailer maker.

Driving Safely With a Trailer

The added weight, length, and height of a trailer will affect your vehicle's handling and performance, so driving with a trailer requires some special driving skills and techniques.

For your safety and the safety of others, take time to practice driving maneuvers before heading for the open road, and follow the guidelines in this section.

Towing Speeds and Gears
Drive slower than normal in all driving situations, and obey posted speed limits for vehicles with trailers. Use the D position when towing a trailer on level roads. See "***Driving on Hills***" in the next column for additional gear information. Do not exceed 55 mph (88 km/h). At higher speeds, the trailer may sway or affect vehicle handling.

When driving uphill and downhill, use the S position (without using the paddle shifters) to provide the proper engine power and engine braking on each gear. You can also use the paddle shifters. In this case, select third, second, or first gear with the paddle shifter; depending on the vehicle speeds and road condition. Do not use fourth and fifth gears. The recommended speed range for each gear position is shown in the table.

Gear position	Speed range
1	0 – 38 mph (0 – 60 km/h)
2, 3	19 – 62 mph (30 – 100 km/h)

Making Turns and Braking
Make turns more slowly and wider than normal. The trailer tracks a smaller arc than your vehicle, and it can hit or run over something the vehicle misses. Allow more time and distance for braking. Do not brake or turn suddenly as this could cause the trailer to jackknife or turn over.

CONTINUED

Driving on Hills
When climbing hills, closely watch your temperature gauge (see page 78). If it nears the H (Hot) mark, turn the A/C off, reduce speed and, if necessary, pull to the side of the road to let the engine cool.

When driving down hills, reduce your speed, and shift down to S position, or use the paddle shifters to the lower gear (3, 2 or 1)in the S position. When towing a trailer, do not “ride” the brakes, and remember, it will take longer to slow down and stop when towing a trailer.

If you must stop when facing uphill, use the foot brake or parking brake. Do not try to hold the vehicle in place by pressing on the accelerator, as this can cause the automatic transmission to overheat.

Handling Crosswinds and Buffeting
Crosswinds and air turbulence caused by passing trucks can disrupt your steering and cause the trailer to sway. When being passed by a large vehicle, keep a constant speed, and steer straight ahead. Do not try to make quick steering or braking corrections.

Backing Up
Always drive slowly and have someone guide you when backing up. Grip the *bottom* of the steering wheel; then turn the wheel to the left to get the trailer to move to the left, and turn the wheel right to move the trailer to the right.

Parking
Follow all normal precautions when parking, including putting the transmission in Park and firmly setting the parking brake. Also, place wheel chocks at each of the trailer's tires.

Towing Your Vehicle
Your vehicle is not designed to be towed behind a motor home. If your vehicle needs to be towed in an emergency, see page 475.

General Information
Your vehicle has been designed primarily for use on pavement. But its higher ground clearance and super handling-all wheel drive (SH-AWD) system allow you to occasionally travel on unpaved roads, to campgrounds, picnic sites, and similar locations. It is not designed for trailblazing, mountain climbing, or other challenging off-road activities.

If you decide to drive on unpaved roads, you will find that it requires somewhat different driving skills. Your vehicle will also handle somewhat differently than it does on pavement. So be sure to read this owner's manual, pay special attention to the precautions and tips in this section, and get acquainted with your vehicle before you leave the pavement.

⚠WARNING

Improperly operating this vehicle on or off-pavement can cause a crash or rollover in which you and your passengers could be seriously injured or killed.

- Follow all instructions and guidelines in this owner's manual.
- Keep your speed low, and don't drive faster than conditions permit.

Important Safety Precautions
To avoid loss of control or rollover, be sure to follow all precautions and recommendations.

- Be sure to store cargo properly, and do not exceed your vehicle cargo load limits (see pages 366 and 397).
- Wherever you drive, make sure you and your passengers always wear seat belts.
- Keep your speed low, and never go faster than the conditions allow.
- It's up to you to continually assess the situation and drive within the limits.

CONTINUED

Check Out Your Vehicle
Before you leave the pavement, be sure to do all scheduled maintenance and service, and inspect your vehicle for any problems. Pay special attention to the condition of the tires, and check the tire pressures.

After you return to the pavement, carefully inspect your vehicle to make sure there is no damage that could make driving it unsafe. Recheck the condition of the tires and the tire pressures.

Remember
The route presents limits (too steep or bumpy roads). You have limits (driving skill and comfort). And your vehicle has limits (traction, stability, and power).

Driving off-highway can be hazardous if you fail to recognize limits and take the proper precautions.

Accelerating and Braking
For better traction on all surfaces, accelerate slowly and gradually build up speed. If you try to start too fast on wet soil, mud, snow, or ice, you might not have enough traction to get underway, and you may dig yourself a hole. Starting with the shift lever in the D position will help you have a smoother start on snow or ice.

Keep in mind that you will usually need more time and distance to brake to a stop on unpaved surfaces. Avoid hard braking. Do not “pump” the brakes; let the anti-lock braking system pump them for you.

Avoiding Obstacles
Debris in the road can damage your suspension or other components. Because your vehicle has a high center of gravity, driving over a large obstacle, or allowing a wheel to drop into a deep hole can cause your vehicle to tip or roll over.

Driving on Slopes
If you can't clearly see all conditions or obstacles on a slope, walk the slope before you drive on it. If you have any doubt whether or not you can safely drive on the slope, don't do it. Find another route.

If you are driving up a hill and find that you cannot continue, *do not try to turn around.* Your vehicle could roll over. Slowly back down the hill, following the same route you took up the hill.

Crossing a Stream
Avoid driving through deep water. If you encounter water in your route (a small stream or large puddle, for example), evaluate it carefully before going ahead. Make sure it is shallow, flowing slowly, and has firm ground underneath. If you are not sure of the depth or the ground, turn around and find another route.

Driving through deep water can also damage your vehicle. The water can get into the transmission and differential, diluting the lubricant and causing an eventual failure. It can also wash the grease out of the wheel bearings.

If You Get Stuck
Avoid driving on soft sand, deep mud, or other surfaces where you could get stuck. If you do happen to get stuck because of inclement weather or other conditions, choose a safe and appropriate course of action.

You should never use a jack to try getting unstuck. A jack only works on firm, level ground. Also, your vehicle could easily slip off the jack and hurt you or someone else.

If you spin the wheels excessively trying to get unstuck, you may overheat the components of the SH-AWD system. The SH-AWD indicator on the instrument panel blinks to indicate the rear differential temperature is too high.

You will also see an “SH-AWD DIFF TEMP. HIGH” message on the multi-information display (see page 385).

If this happens, stop and allow everything to cool down. The SH-AWD indicator goes off after the rear differential temperature drops.

This section explains why it is important to keep your vehicle well maintained and how to follow basic maintenance safety precautions.

This section also includes instructions on how to read the Maintenance Minder messages on the multi-information display, and instructions for simple maintenance tasks you may want to take care of yourself.

If you have the skills and tools to perform more complex maintenance tasks on your vehicle, you may want to purchase the service manual. See page 497 for information on how to obtain a copy, or see your dealer.

U.S. Vehicles: **Maintenance, replacement, or repair of emissions control devices and systems may be done by any automotive repair establishment or individual using parts that are "certified" to EPA standards.**

Maintenance Safety 410
Maintenance Minder™ 411
Fluid Locations 419
Adding Engine Oil 420
  Required Engine Oil 420
Changing the Engine Oil and Filter 422
Engine Coolant 424
Windshield Washers 426
Automatic Transmission Fluid 427
Brake Fluid 429
Power Steering Fluid 430
Lights 431
Cleaning the Seat Belts 438
Floor Mats 438
Audio Antenna 439
Intercooler 439
Dust and Pollen Filter 439
Wiper Blades 440
Wheels 443
Tires 444
Checking the Battery 450
Vehicle Storage 451
Interior Care 452

All service items not detailed in this section should be performed by a certified technician or other qualified mechanic.

Important Safety Precautions
To eliminate potential hazards, read the instructions before you begin, and make sure you have the tools and skills required.

- Make sure your vehicle is parked on level ground, the parking brake is set, and the engine is off.
- To clean parts, use a commercially available degreaser or parts cleaner, not gasoline.
- To reduce the possibility of fire or explosion, keep cigarettes, sparks, and flames away from the battery and all fuel-related parts.
- Wear eye protection and protective clothing when working with the battery or compressed air.

⚠WARNING

Improperly maintaining this vehicle or failing to correct a problem before driving can cause a crash in which you can be seriously hurt or killed.

Always follow the inspection and maintenance recommendations and schedules in this owner's manual.

Potential Vehicle Hazards

- **Carbon Monoxide poison from engine exhaust.** Be sure there is adequate ventilation whenever you operate the engine.
- **Burns from hot parts.** Let the engine and exhaust system cool down before touching any parts.
- **Injury from moving parts.** Do not run the engine unless instructed to do so.

⚠WARNING

Failure to properly follow maintenance instructions and precautions can cause you to be seriously hurt or killed.

Always follow the procedures and precautions in this owner's manual.

Some of the most important safety precautions are given here. However, we cannot warn you of every conceivable hazard that can arise in performing maintenance. Only you can decide whether or not you should perform a given task.

One of the most convenient and important features of the multi-information display on your vehicle is the Maintenance Minder™.

Based on engine operating conditions and accumulated engine revolutions, the onboard computer in your vehicle calculates the remaining engine oil life and displays it as a percentage.

The system also displays the code for other scheduled maintenance items needing service.

Engine Oil Life

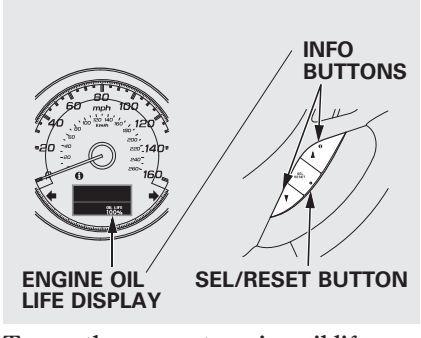

To see the current engine oil life displayed on the multi-information display, turn the ignition switch to the ON (II) position, and press the SEL/RESET button on the steering wheel repeatedly until the engine oil life is displayed.

The remaining engine oil life is shown on the display according to this table:

Calculated Engine Oil Life (%)	Displayed Engine Oil Life (%)
100% – 91%	100%
90% – 81%	90%
80% – 71%	80%
70% – 61%	70%
60% – 51%	60%
50% – 41%	50%
40% – 31%	40%
30% – 21%	30%
20% – 16%	20%
15% – 11%	15%
10% – 6%	10%
5% – 1%	5%
0%	0%

CONTINUED



When the remaining engine oil life is 15 to 6 percent, the multi-information display shows a “SERVICE DUE SOON” message along with the maintenance schedule code indicating the main and sub items required at the time of the oil change. Refer to page 418 for a complete list of the maintenance main items and sub items.



When the remaining oil life is 5 to 1 percent, the multi-information display shows a “SERVICE DUE NOW” message with the same maintenance items “SERVICE DUE SOON” was displayed with. When you see this message have the indicated maintenance performed as soon as possible.

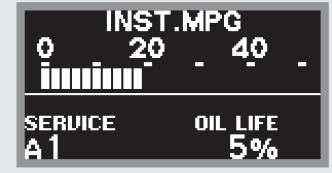

Press the SEL/RESET button on the steering wheel repeatedly to select the engine oil life. The message “SERVICE”, along with “5%”, and the maintenance item code are displayed on the lower part of the multi-information display when the calculated engine oil life is 1 – 5 percent (see page 411).



If the indicated maintenance service is not done and the remaining engine oil life reaches 0%, the multi-information display will show the message “SERVICE PAST DUE” and the maintenance item code(s). This message is displayed when the total distance traveled is less than 10 miles (for U.S. models) or 10 km (for Canadian models) after the engine oil life became 0%.

These messages will come on every time you turn the ignition switch to the ON (II) position.

Immediately have the service performed, and make sure to reset the oil life minder as previously described.

The message will be canceled if the ▼ or ▲ button on the steering wheel is pressed. Press the ▼ or ▲ button to see the message again.

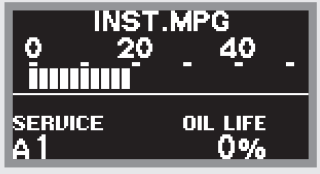

Press the SEL/RESET button on the steering wheel repeatedly to select the engine oil life. The message “SERVICE”, along with “0%”, and the maintenance item code are displayed on the lower part of the multi-information display when the calculated engine oil life is 0 – 1%.

CONTINUED

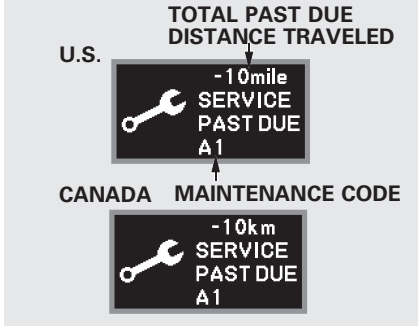

If the indicated required service is not done and the remaining engine oil life becomes 0%, the multi-information display will show a “SERVICE PAST DUE” message, the total distance traveled after the remaining oil life became 0%, and the maintenance item code(s).

This message is displayed again when you drive over 10 miles (for U.S. models) or 10 km (for Canadian models) after seeing the 0% message.

Immediately have the service performed, and make sure to reset the display as previously described.

The message will be canceled if the ▼ or ▲ button on the steering wheel is pressed. Press the ▼ or ▲ button to see the message again.

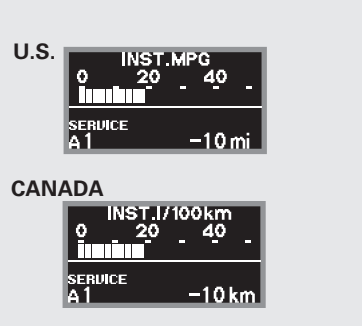

When you press the SEL/RESET button to select the engine oil life, the message “SERVICE”, along with the maintenance item code and the total negative distance traveled after the oil life became 0%, will be displayed on the lower part of the multi-information display.

Maintenance Main Items and Sub Items

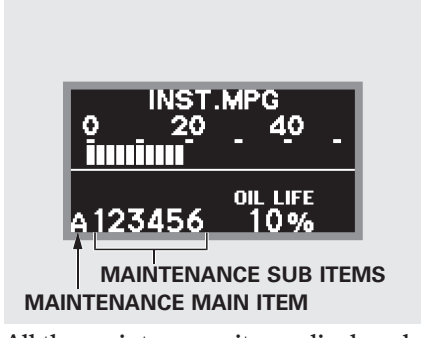

All the maintenance items displayed on the multi-information display are in code.

For an explanation of the maintenance codes, see page 418.

Resetting the Engine Oil Life Display

Your dealer will reset the display after completing the required maintenance service. You will see "OIL LIFE 100%" on the display the next time you turn the ignition switch to the ON (II) position.

If maintenance service is done by someone other than your dealer, reset the Maintenance Minder as follows:

1. Turn the ignition switch to the ON (II) position.
2. Press the SEL/RESET button on the steering wheel until you see the engine oil life display.



3. Press and hold the SEL/RESET button on the steering wheel for more than 10 seconds. The remaining engine oil life reset mode will be shown on the multi-information display.

CONTINUED

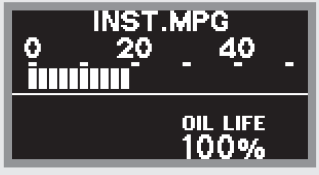

4. Select “RESET” by pressing the INFO (▼/▲) button, then press the SEL/RESET button to reset the engine oil life display. The maintenance item code(s) will disappear, and the engine oil life will reset to “100.” If you want to cancel the oil life reset mode, select “CANCEL.”

Important Maintenance Precautions

If you have the required service done but do not reset the display, or reset the display without doing the service, the system will not show the proper maintenance intervals. This can lead to serious mechanical problems because you will no longer have an accurate record of when maintenance is needed.

Your authorized dealer knows your vehicle best and can provide competent, efficient service. However, service at a dealer is not mandatory to keep your warranties in effect. Maintenance may be done by any qualified service facility or person who is skilled in this type of automotive service. Keep all receipts as proof of completion, and have the person who does the work fill out your Maintenance Journal or Canadian Maintenance Log. Check your warranty booklet for more information.

We recommend using Acura parts and fluids whenever you have maintenance done. These are manufactured to the same high-quality standards as the original components, so you can be confident of their performance and durability.

U.S. Vehicles:
According to state and federal regulations, failure to perform maintenance on the items marked with # will not void your emissions warranties. However, Acura recommends that all maintenance services be performed in accordance with the intervals indicated by the multi-information display.

Owner's Maintenance Checks
You should check the following items at the specified intervals. If you are unsure of how to perform any check, turn to the appropriate page listed.

- Engine oil level − Check every time you fill the fuel tank. See page 357.
- Engine coolant level − Check the radiator reserve tank every time you fill the fuel tank. See page 358.
- Automatic transmission − Check the fluid level monthly. See page 427.
- Brakes − Check the fluid level monthly. See page 429.
- Tires − Check the tire pressure monthly. Examine the tread for wear and foreign objects. See page 445.
- Lights − Check the operation of all the lights monthly. See page 431.

Maintenance Minder™

Symbol	Maintenance Main Items
A	● Replace engine oil*1

B	● Replace engine oil*1 and oil filter
	● Inspect front and rear brakes
	● Check parking brake adjustment
	● Inspect these items:
	  ● Tie rod ends, steering gear box, and boots
	  ● Suspension components
	  ● Driveshaft boots
	  ● Brake hoses and lines (including ABS/VSA)
	  ● All fluid levels and condition of fluids
	  ● Exhaust system#
	  ● Fuel lines and connections#

*1: If the message "SERVICE" does not appear more than 12 months after the display is reset, change the engine oil every year.

#: See information on maintenance and emissions warranty on page 417.

NOTE:
- Independent of the Maintenance Minder information, replace the brake fluid every 3 years.
- Inspect idle speed every 160,000 miles (256,000 km).
- Adjust the valves during services A, B, 1, 2, or 3 if they are noisy.

Symbol	Maintenance Sub Items
1	● Rotate tires
2	● Replace air cleaner element If you drive in dusty conditions, replace every 15,000 miles (24,000 km). ● Replace dust and pollen filter If you drive primarily in urban areas that have high concentrations of soot in the air from industry and from diesel-powered vehicles, replace every 15,000 miles (24,000 km). ● Inspect drive belt
3	● Replace transmission and transfer*2 fluid Driving in mountainous areas at very low vehicle speeds or trailer towing results in higher transmission and transfer temperatures. This requires transmission and transfer fluid changes more frequently than recommended by the Maintenance Minder. If you regularly drive your vehicle under these conditions, have the transmission and transfer fluid changed at 60,000 miles (100,000 km), then every 30,000 miles (48,000 km).
4	● Replace spark plugs ● Inspect valve clearance
5	● Replace engine coolant
6	● Replace rear differential fluid*2 Driving in mountainous areas at very low vehicle speeds or trailer towing results in higher level of mechanical (shear) stress to fluid. This requires differential fluid changes more frequently than recommended by the Maintenance Minder. If you regularly drive your vehicle under these conditions, have the differential fluid changed at 7,500 miles (12,000 km), then every 15,000 miles (24,000 km).

*2: SH-AWD only

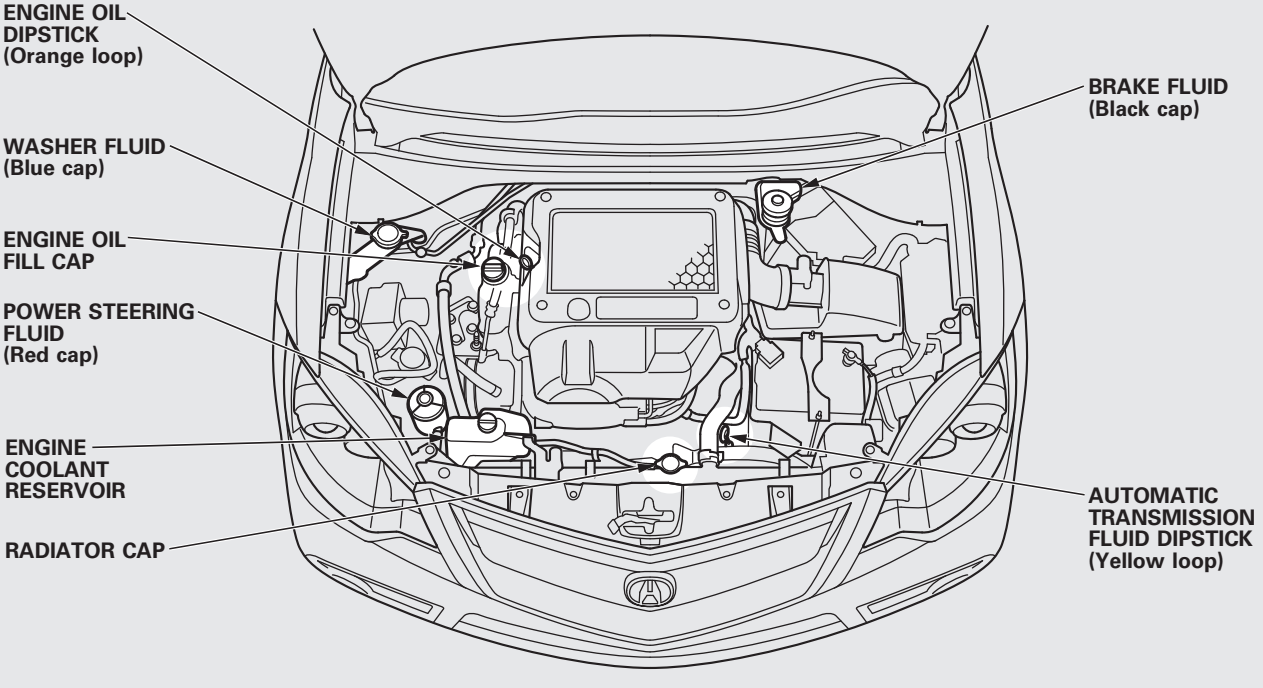
ENGINE OIL DIPSTICK (Orange loop)
WASHER FLUID (Blue cap)
ENGINE OIL FILL CAP
POWER STEERING FLUID (Red cap)
ENGINE COOLANT RESERVOIR
RADIATOR CAP
BRAKE FLUID (Black cap)
AUTOMATIC TRANSMISSION FLUID DIPSTICK (Yellow loop)

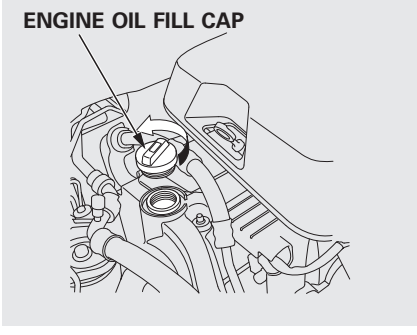

Unscrew and remove the engine oil fill cap on top of the valve cover. Pour in the oil slowly and carefully so you do not spill any. Clean up any spills immediately. Spilled oil could damage components in the engine compartment.

Reinstall the engine oil fill cap, and tighten it securely. Wait a few minutes, and recheck the oil level on the engine oil dipstick. Do not fill above the upper mark; you could damage the engine.

Required Engine Oil

Oil is a major contributor to your engine's performance and longevity. Your vehicle is equipped with a high-performance turbocharged engine that requires the use of synthetic motor oil. Always use Mobil 1® 5W-30 or an equivalent oil that meets the Acura HTO-06 standard. Not all synthetic oils will meet this standard. Only use oils that display the HTO-06 standard on the label.

Failure to use Mobil 1® or an equivalent oil that meets the HTO-06 standard can lead to a reduction in engine performance or durability, and can cause engine damage not covered by your warranty.

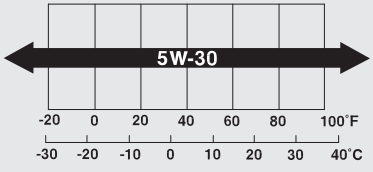

Ambient Temperature

The oil viscosity or weight is provided on the container's label. 5W-30 oil is formulated for year-round protection of your vehicle to improve cold weather starting and fuel economy.

Engine Oil Additives

Your vehicle does not require any oil additives. Additives may adversely affect the engine or transmission performance and durability.

Changing the Engine Oil and Filter

Always change the oil and filter according to the maintenance messages shown on the multi-information display. The oil and filter collect contaminants that can damage your engine if they are not removed regularly.

Changing the oil and filter requires special tools and access from underneath the vehicle. The vehicle should be raised on a service station-type hydraulic lift for this service. Unless you have the knowledge and proper equipment, you should have this maintenance done by a skilled technician.

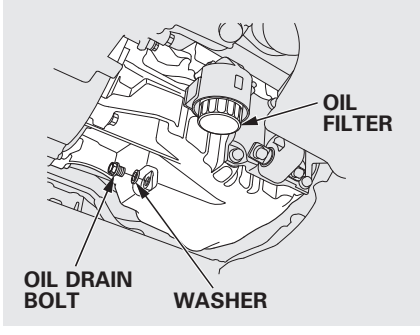

1. Run the engine until it reaches normal operating temperature, then shut it off.
2. Open the hood, and remove the engine oil fill cap. Remove the oil drain bolt and washer from the bottom of the engine. Drain the oil into an appropriate container.
3. Remove the oil filter, and let the remaining oil drain. A special wrench (available from your dealer) is required.
4. Check the oil filter to make sure its gasket did not stick to the filter base. A stuck gasket could cause an oil leak.
5. Install a new oil filter according to the instructions that come with it.

6. Put a new washer on the drain bolt, then reinstall the drain bolt. Tighten the drain bolt to:
   29 lbf·ft (39 N·m , 4.0 kgf·m)
7. Refill the engine with the recommended oil.

   Engine oil change capacity (including filter):
   5.0 US qt (4.7 L)
8. Reinstall the engine oil fill cap. Start the engine. The oil pressure indicator should go out within 5 seconds. If it does not, turn off the engine, and check your work.
9. Let the engine run for several minutes, then check the drain bolt and oil filter for leaks.
10. Turn off the engine and let it sit for several minutes, then check the oil level on the dipstick. If necessary, add more oil.

NOTICE

Improper disposal of engine oil can be harmful to the environment. If you change your own oil, please dispose of the used oil properly. Put it in a sealed container and take it to a recycling center. Do not discard it in a trash bin or dump it on the ground.

Adding Engine Coolant

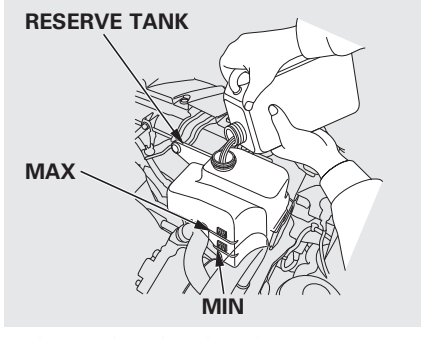

If the coolant level in the reserve tank is at or below the MIN line, add coolant to bring it up to the MAX line. Inspect the cooling system for leaks.

Always use Honda Long-life Anti-freeze/Coolant Type 2. This coolant is pre-mixed with 50 percent antifreeze and 50 percent water. Never add straight antifreeze or plain water.

If Honda antifreeze/coolant is not available, you may use another major-brand non-silicate coolant as a temporary replacement. Make sure it is a high-quality coolant recommended for aluminum engines. Continued use of any non-Honda coolant can result in corrosion, causing the cooling system to malfunction or fail. Have the cooling system flushed and refilled with Honda antifreeze/coolant as soon as possible.

If the reserve tank is completely empty, you should also check the coolant level in the radiator.

⚠WARNING

Removing the radiator cap while the engine is hot can cause the coolant to spray out, seriously scalding you.

Always let the engine and radiator cool down before removing the radiator cap.

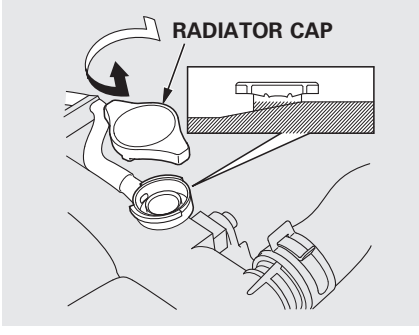

1. Make sure the engine and radiator are cool.
2. Relieve any pressure in the cooling system by turning the radiator cap counterclockwise, without pressing down.
3. Remove the radiator cap by pushing down and turning counterclockwise.

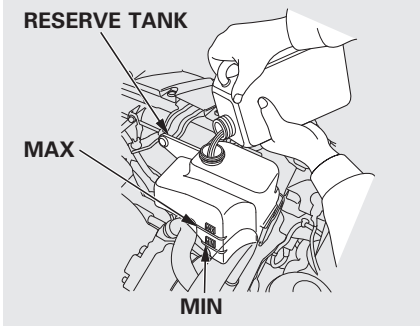

4. The coolant level should be up to the base of the filler neck. Add coolant if it is low.

   Pour the coolant slowly and carefully so you do not spill any. Clean up any spills immediately; it could damage components in the engine compartment.

5. Put the radiator cap back on, and tighten it fully.
6. Pour coolant into the reserve tank. Fill it halfway between the MAX and MIN marks. Put the cap back on the reserve tank.

Do not add any rust inhibitors or other additives to your vehicle's cooling system. They may not be compatible with the coolant or engine components.

Check the fluid level in the windshield washer reservoir at least monthly during normal use.

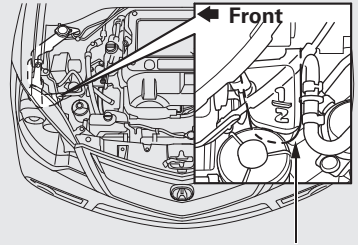

WINDSHIELD WASHER RESERVOIR

On U.S. models: To check the windshield washer fluid level, open the hood and look at the windshield washer reservoir located behind the left headlight. You will see a “1/2” mark on the reservoir.

On Canadian models
If the washer fluid is low, a “WASHER FLUID LOW” message appears on the multi-information display.

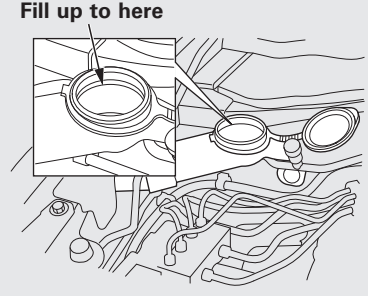

Fill the reservoir with a good-quality windshield washer fluid. This increases the cleaning capability and prevents freezing in cold weather.

When you refill the reservoir, clean the edges of the windshield wiper blades with windshield washer fluid on a clean cloth. This will help to condition the blade edges.

NOTICE

Do not use engine antifreeze or a vinegar/water solution in the windshield washer reservoir. Antifreeze can damage your vehicle's paint, while a vinegar/water solution can damage the windshield washer pump. Use only commercially-available windshield washer fluid.

Automatic Transmission Fluid

The transmission should be drained and refilled with new fluid when this service is shown on a maintenance message on the multi-information display.

Check the fluid level with the engine at normal operating temperature.

1. Park the vehicle on level ground. Start the engine, let it run until the radiator fan comes on, then shut off the engine. For accurate results, wait about 60 seconds (but no longer than 90 seconds) before doing step 2.

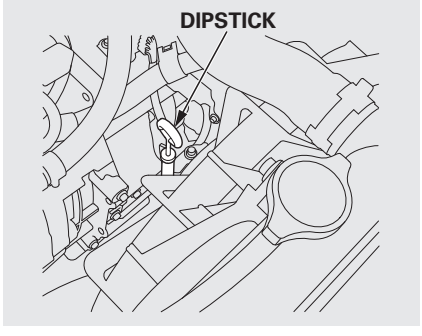

2. Remove the dipstick (yellow loop) from the transmission, and wipe it with a clean cloth.

CONTINUED

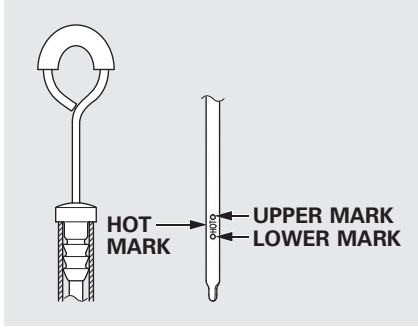

3. Insert the dipstick all the way into the transmission securely as shown in the illustration.
4. Remove the dipstick and check the fluid level. It should be between the upper and lower marks.

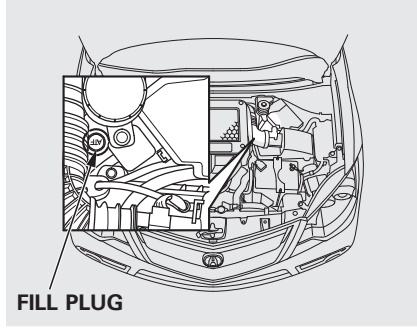

5. If the level is below the lower mark, remove the fill plug, then add the fluid into the fill hole to bring it to the level between the upper and lower marks on the dipstick.

   Pour the fluid slowly and carefully so you do not spill any. Clean up any spills immediately; it could damage components in the engine compartment.

Always use Acura ATF DW-1 (automatic transmission fluid).

NOTICE

Use only Acura ATF DW-1 (automatic transmission fluid). Do not mix with other transmission fluids.
Using transmission fluid other than Acura ATF DW-1 may cause deterioration in transmission operation and durability, and could result in damage to the transmission.
Damage resulting from the use of transmission fluid other than Acura ATF DW-1 is not covered by the Acura new vehicle warranty.

6. Insert the dipstick all the way back into the transmission securely as shown in the illustration.

If you are not sure how to add fluid, contact your dealer.

Check the fluid level in the brake fluid reservoir monthly.

Independent of the Maintenance Minder information, replace the brake fluid every 3 years.

Always use Honda Heavy Duty Brake Fluid DOT 3. If it is not available, you should use only DOT 3 or DOT 4 fluid, from a sealed container, as a temporary replacement.

Using any non-Honda brake fluid can cause corrosion and decrease the life of the system. Have the brake system flushed and refilled with Honda Heavy Duty Brake Fluid DOT 3 as soon as possible.

Brake fluid marked DOT 5 is not compatible with your vehicle's braking system and can cause extensive damage.

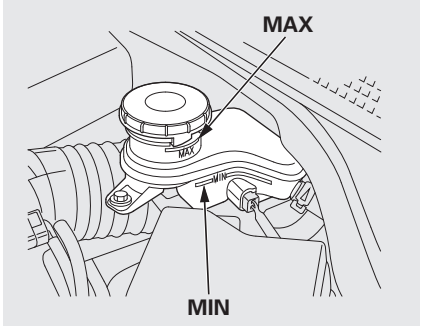

The fluid level should be between the MIN and MAX marks on the side of the reservoir. If the level is at or below the MIN mark, your brake system needs attention. Have the brake system inspected for leaks or worn brake pads.

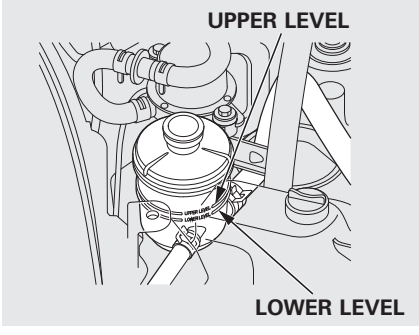

Check the level on the side of the reservoir when the engine is cold. The fluid should be between the UPPER LEVEL and LOWER LEVEL. If not, add power steering fluid to the UPPER LEVEL.

Pour the fluid slowly and carefully so you do not spill any. Clean up any spills immediately; it could damage components in the engine compartment.

Always use Acura Power Steering Fluid. You may use another power steering fluid as an emergency replacement, but have the power steering system flushed and refilled with Acura PSF as soon as possible.

A low power steering fluid level can indicate a leak in the system. Check the fluid level frequently, and have the system inspected as soon as possible.

If you are not sure how to add fluid, contact your dealer.

NOTICE

Turning the steering wheel to full left or right lock and holding it there can damage the power steering pump.

Headlight Aiming

The headlights were properly aimed when your vehicle was new. If you regularly carry heavy items in the cargo area or pull a trailer, readjustment may be required. Adjustments should be done by your dealer or another qualified technician.

Low Beam Headlight Bulb Replacement

The low beam headlight bulbs are high voltage discharge tube. High voltage can remain in the circuit even with the light switch off and the key removed. Because of this, you should not attempt to examine or change a low beam headlight bulb yourself. If a low beam headlight bulb fails, take the vehicle to your dealer to have it replaced.

Replacing a High Beam Headlight Bulb

Your vehicle has halogen headlight bulbs. When replacing a bulb, handle it by its base, and protect the glass from contact with your skin or hard objects. If you touch the glass, clean it with denatured alcohol and a clean cloth.

NOTICE

Halogen headlight bulbs get very hot when lit. Oil, perspiration, or a scratch on the glass can cause the bulb to overheat and shatter.

1. Open the hood.
   Remove the electrical connector from the bulb by pushing on the tab and pulling the connector down.
2. Remove the bulb by turning it about one-quarter turn counterclockwise.

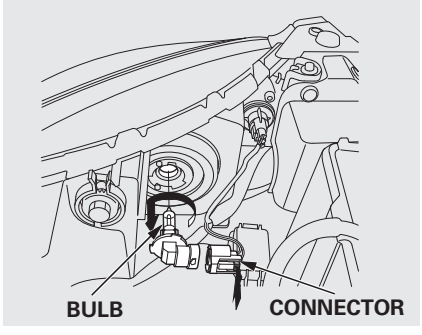

3. Insert the new bulb into the hole, and turn it one-quarter turn clockwise to lock it in place.
4. Push the electrical connector onto the new bulb.
5. Turn on the headlights to test the new bulb.

CONTINUED

Replacing a Front Turn Signal/ Parking Light Bulb

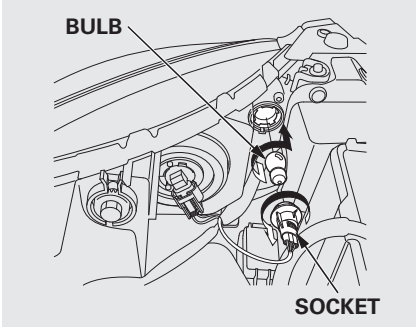

1. Open the hood. Remove the socket from the headlight assembly by turning it one-quarter turn counterclockwise.
2. Remove the bulb from the socket by pushing the bulb in and turning it counterclockwise until it unlocks.
3. Install the new bulb in the socket. Turn it clockwise to lock it in place.
4. Test the lights to make sure the new bulb is working.
5. Insert the socket back into the headlight assembly. Turn it clockwise to lock it in place.

Replacing a Front Side Marker Light Bulb

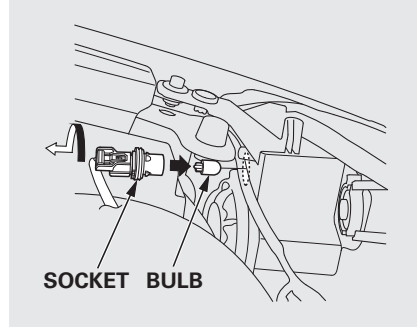

1. Open the hood. Remove the socket from the headlight assembly by turning it one-quarter turn counterclockwise.
2. Pull the bulb straight out of its socket. Push the new bulb straight into the socket until it bottoms.

3. Install the socket back into the headlight assembly. Turn it clockwise to lock it in place.
4. Turn on the lights to make sure the new bulb is working.

Replacing Rear Bulbs (in Tailgate)

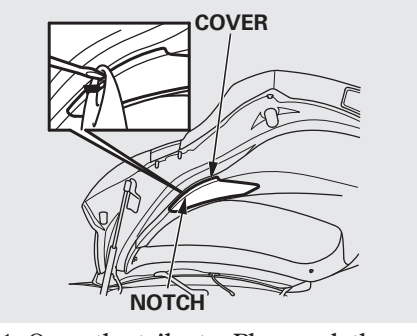

1. Open the tailgate. Place a cloth on the edge of the light assembly cover to prevent scratches. Remove the cover by carefully prying in the notch on its middle edge with a flat-tip screwdriver.
2. Determine which of the two bulbs is burned out: taillight or back-up light.

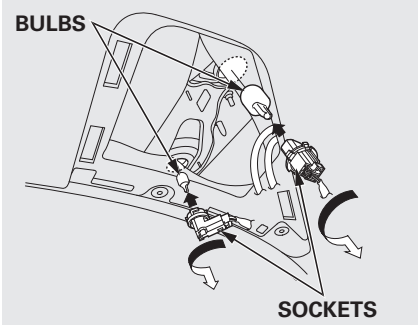

3. Remove the socket by turning it one-quarter turn counterclockwise.
4. Pull the bulb straight out of its socket. Push the new bulb straight into the socket until it bottoms.

CONTINUED

5. Turn on the lights to make sure the new bulb is working.
6. Reinstall the socket into the light assembly by turning it clockwise until it locks.
7. Reinstall the light assembly cover.

Replacing Rear Bulbs (in Rear Pillar)

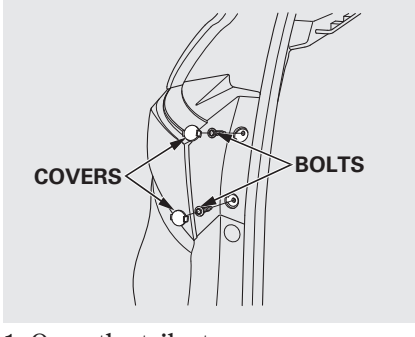

1. Open the tailgate.
2. Remove the two bolt covers on the rear pillar by prying on the bottom edge with a flat-tip screwdriver. Remove the bolts with a Phillips-head screwdriver, and remove the light assembly from the rear pillar.

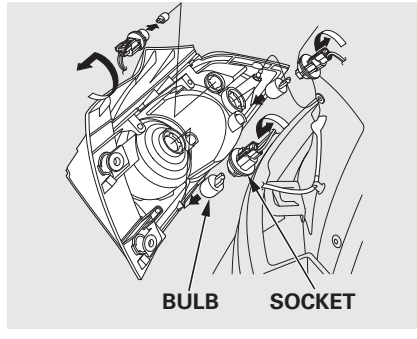

3. Determine which of the three bulbs is burned out: brake/taillight, turn signal or rear side marker.
4. Remove the socket by turning it one-quarter turn counterclockwise.
5. Pull the bulb straight out of its socket. Push the new bulb straight into the socket until it bottoms.

6. Turn on the lights to make sure the new bulb is working.
7. Put the socket back into the light assembly, and turn it clockwise to lock it in place.
8. Install the rear light assembly in the rear pillar. Tighten the two bolts. Snap the bolt covers into position.

Replacing a Front Fog Light Bulb

Your vehicle uses halogen light bulbs. When replacing a bulb, handle it by its plastic case, and protect the glass from contact with your skin or hard objects. If you touch the glass, clean it with denatured alcohol and a clean cloth.

NOTICE

Halogen bulbs get very hot when lit. Oil, perspiration, or a scratch on the glass can cause the bulb to overheat and shatter.

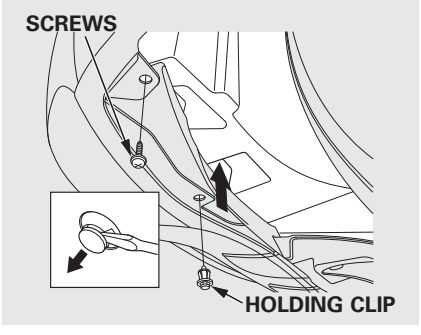

1. Use a Phillips-head screwdriver to remove the screw and use a flat-tip screwdriver to remove the holding clip located under the front bumper.
2. Push up the undercover.

CONTINUED

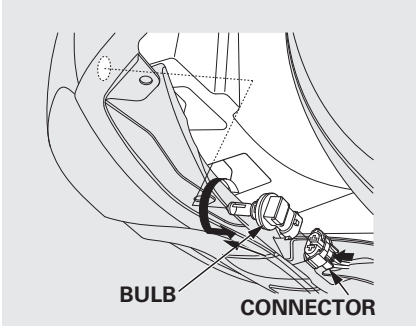

3. Remove the electrical connector from the bulb by pushing on the tab and pulling the connector down.
4. Remove the bulb from the fog light assembly by turning it one-quarter turn counterclockwise.
5. Install the new bulb into the hole and turn it one-quarter turn clockwise to lock it in place.
6. Push the electrical connector back onto the bulb. Make sure it is on all the way.
7. Turn on the fog lights to test the new bulb.
8. Put the undercover in place. Reinstall the clip, and tighten the screw securely.

Replacing a High-mount Brake Light Bulb

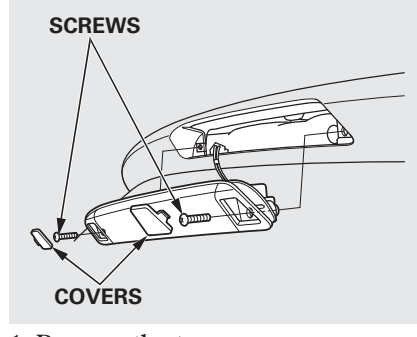

1. Remove the two screw covers on the light assembly by prying on the side edge with a flat-tip screwdriver.
2. Remove the screws with a Phillips-head screwdriver, then remove the light assembly from the tailgate.

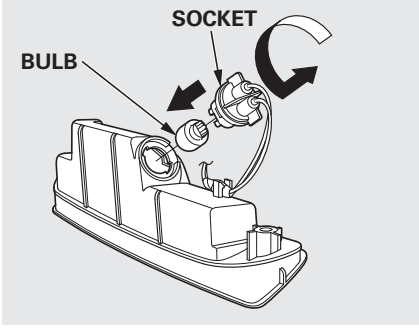

3. Remove the socket from the light assembly by turning it one-quarter turn counterclockwise.
4. Pull the bulb straight out of its socket. Push the new bulb straight into the socket until it bottoms.
5. Press the brake pedal to make sure the new bulb is working.
6. Put the socket back into the light assembly, and turn it clockwise to lock it in place.
7. Reinstall the high-mount brake light assembly into the tailgate. Tighten the two screws and reinstall the covers.

Side Turn Signal Lights
Each outside mirror has side turn signal lights. The lights should be replaced by your dealer.

Replacing a Rear License Plate Light Bulb
The license plate has two lights above it. The bulbs should be replaced by your dealer.

Cleaning the Seat Belts

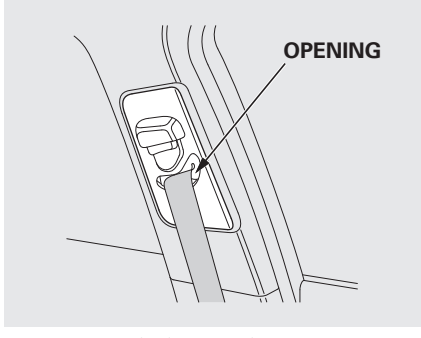

If your seat belts get dirty, use a soft brush with a mixture of mild soap and warm water to clean them. Do not use bleach, dye, or cleaning solvents. Let the belts air-dry before you use the vehicle.

Dirt build-up the openings of the seat belt anchors can cause the belts to retract slowly. Wipe the openings with a clean cloth dampened in mild soap and warm water or isopropyl alcohol.

Floor Mats

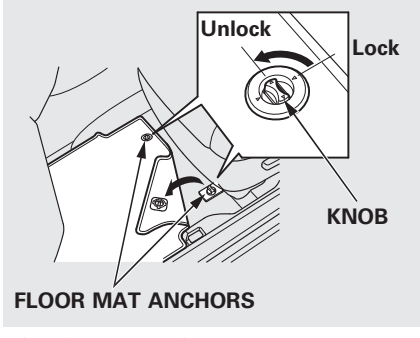

The driver's and front passenger's floor mats that came with your vehicle hook over the floor mat anchors. To lock each anchor, turn the knob clockwise. This keeps the floor mats from sliding forward (possibly interfering with the pedals), or backwards (making the front passenger's weight sensors ineffective). If you remove a floor mat, make sure to re-anchor it when you put it back in your vehicle.

If you use a non-Acura floor mat, make sure it fits properly and that it can be used with the floormat anchors. Do not put additional floor mats on top of the anchored mats.

Audio Antenna

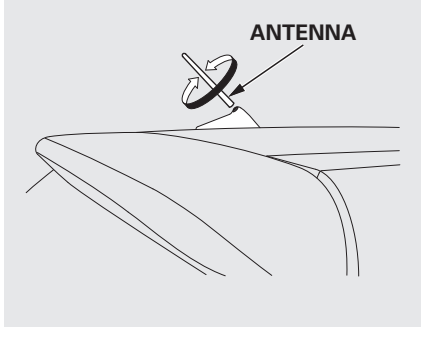

NOTICE

Your vehicle is equipped with an antenna at the rear of the roof. Before using a ''drive-through'' car wash, remove the antenna by unscrewing it by hand. This prevents the antenna from being damaged by the car wash brushes.

Intercooler

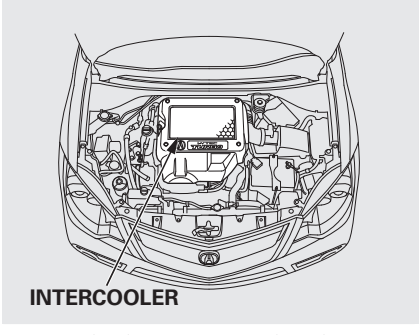

Your vehicle is equipped with a intercooler on the engine to cool the air flow from a turbo charger into the engine. The intercooler fins bend easily. Do not push them with your finger.

NOTICE

Do not spray water (from such sources as garden hoses, high pressure sprayers) into the engine compartment. It may cause serious damage to your vehicle, and could also damage the intercooler fins.

Dust and Pollen Filter

This filter removes the dust and pollen that is brought in from the outside through the climate control system.

Have your dealer replace the filter when this service is indicated by a maintenance message on the multi-information display. It should be replaced every 15,000 miles (24,000 km) if you drive primarily in urban areas that have high concentrations of soot in the air, or if the flow from the climate control system becomes less than usual.

Check the condition of the wiper blades at least every six months. Replace them if you find signs of cracking in the rubber, areas that are getting hard, or if they leave streaks and unwiped areas when used.

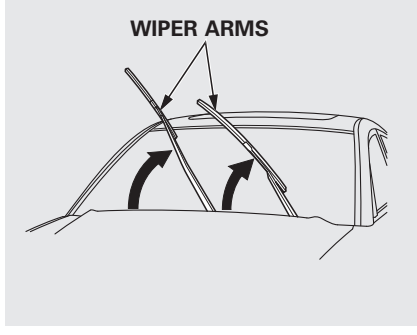

To replace a front wiper blade:

1. Raise each wiper arm off the windshield, lifting the driver's side first, then the passenger's side.

NOTICE

Do not open the hood when the wiper arms are raised, or you will damage the hood and the wiper arms.

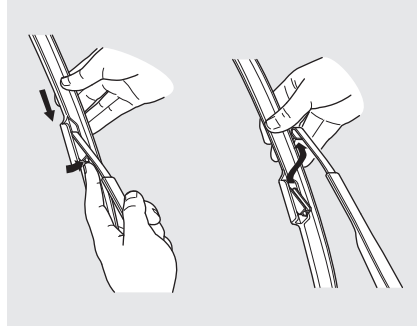

2. Disconnect the blade assembly from the wiper arm:
   - Press and hold the lock tab.
   - Slide the blade assembly toward the lock tab until it releases from the wiper arm.

   When replacing a wiper blade, make sure not to drop the wiper blade or wiper arm down on the windshield.

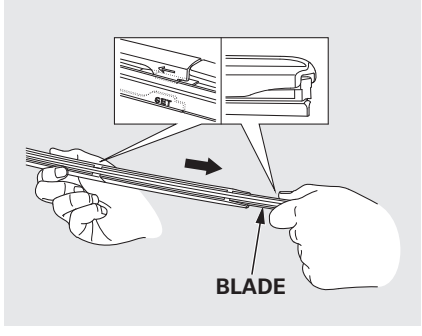

3. Remove the blade from the blade assembly:
   - Find two tabs with a “SET” and “←” mark on the wiper blade assembly. The opposite side of the “←” mark is the direction you pull out the wiper blade.
   - Pull out the blade by grabbing the end of it as shown in the above illustration.

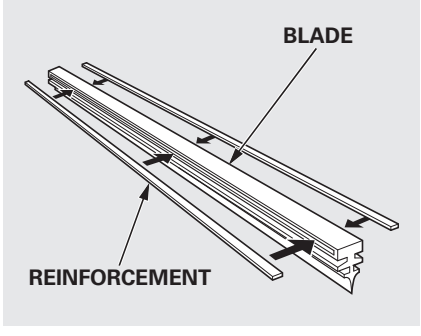

4. Examine the new wiper blades. If they have no plastic or metal reinforcement along the back edge, remove the metal reinforcement strips from the old wiper blade, and install them in the slots along the edge of the new blade.

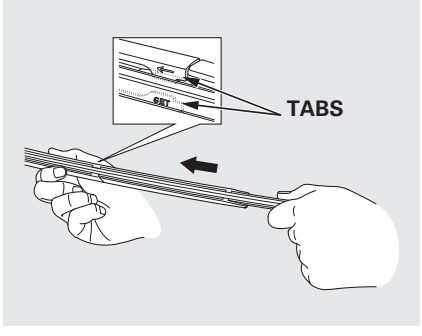

5. Install the new blade onto the blade assembly:
   - Find two tabs with a “SET” and “←” mark on the wiper blade assembly. This is the direction you install.
   - Slide the blade onto the assembly until it is locked by the tabs.

CONTINUED

6. Slide the wiper blade assembly onto the wiper arm. Make sure it locks in place.
7. Make sure the blade is completely installed and that its edge is not bunched up.
8. Lower the wiper arm down against the windshield, the passenger's side first, then the driver's side.

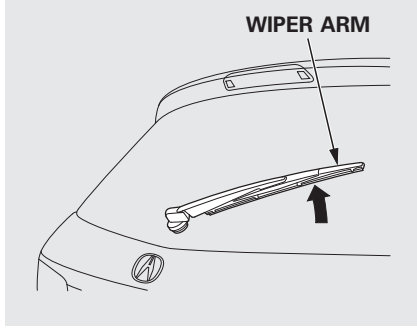

To replace the rear wiper blade:

1. Raise the wiper arm off the rear window.

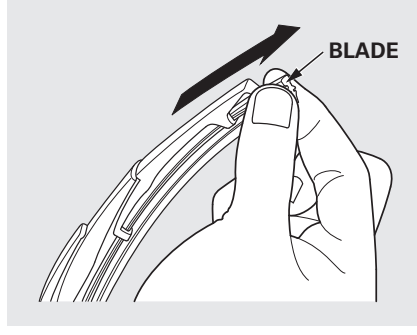

2. Slide the blade out of the wiper arm.

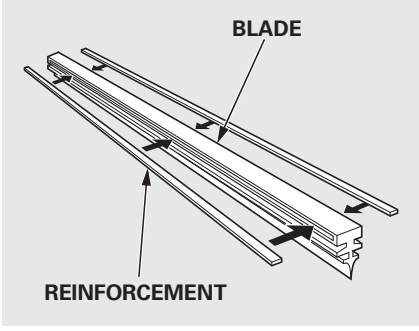

3. Examine the new wiper blades. If they have no plastic or metal reinforcement along the back edge, remove the metal reinforcement strips from the old wiper blade, and install them in the slots along the edge of the new blade.

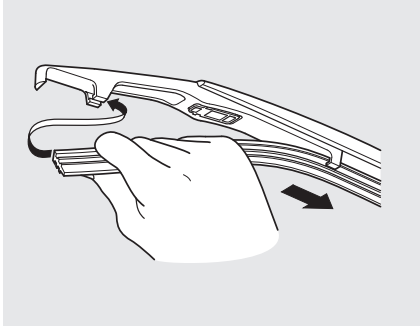

4. Slide the new blade into the wiper arm. Make sure it is engaged in the slot along its full length.
5. Lower the wiper arm.

Wheels

Clean the wheels as you would the rest of the exterior. Wash them with the same solution, and rinse them thoroughly.

Aluminum alloy wheels have a protective clear-coat that keeps the aluminum from corroding and tarnishing. Cleaning the wheels with harsh chemicals (including some commercial wheel cleaners) or a stiff brush can damage the clear-coat. To clean the wheels, use a mild detergent and a soft brush or sponge.

To safely operate your vehicle, your tires must be the proper type and size, in good condition with adequate tread, and correctly inflated.

The following pages give more detailed information on how to take care of your tires and what to do when they need to be replaced.

⚠WARNING

Using tires that are excessively worn or improperly inflated can cause a crash in which you can be seriously hurt or killed.

Follow all instructions in this owner's manual regarding tire inflation and maintenance.

Inflation Guidelines

Keeping the tires properly inflated provides the best combination of handling, tread life, and riding comfort.

- Underinflated tires wear unevenly, adversely affect handling and fuel economy, and are more likely to fail from being overheated.
- Overinflated tires can make your vehicle ride more harshly, are more prone to damage from road hazards, and wear unevenly.

The tire pressure monitoring system (TPMS) will warn you when a tire pressure is low. See page 390 for information on the TPMS.

Even though your vehicle is equipped with TPMS, we recommend that you visually check your tires every day. If you think a tire might be low, check it immediately with a tire gauge.

Use a gauge to measure the air pressure in each tire at least once a month. Even tires that are in good condition may lose 1 to 2 psi (10 to 20 kPa, 0.1 to 0.2 kgf/cm^2) per month. Remember to check the spare tire at the same time.

Check the air pressures when the tires are cold. This means the vehicle has been parked for at least 3 hours, or driven less than 1 mile (1.6 km). Add or release air, if needed, to match the recommended cold tire pressures.

If you check air pressures when the tires are hot (driven for several miles/kilometers), you will see readings 4 to 6 psi (30 to 40 kPa, 0.3 to 0.4 kgf/cm²) higher than the cold readings. This is normal. Do not let air out to match the recommended cold air pressure. The tire will be underinflated.

You should get your own tire pressure gauge and use it whenever you check your tire pressures. This will make it easier for you to tell if a pressure loss is due to a tire problem and not due to a variation between gauges.

While tubeless tires have some ability to self-seal if they are punctured, you should look closely for punctures if a tire starts losing pressure.

Recommended Tire Pressures
The following charts show the recommended cold tire pressures for most normal driving conditions.

Tire Size	Cold Tire Pressure for Normal Driving
P235/55R18 99V	Front/Rear: 32 psi (220 kPa , 2.2 kgf/cm²)

The compact spare tire pressure is: 60 psi (420 kPa , 4.2 kgf/cm²)

For convenience, the recommended tire sizes and cold tire pressures are on a label on the driver's doorjamb.

For additional information about your tires, see page 484.

Tire Inspection
Every time you check inflation, you should also examine the tires for damage, foreign objects, and wear.

You should look for:

- Bumps or bulges in the tread or side of the tire. Replace the tire if you find either of these conditions.
- Cuts, splits, or cracks in the side of the tire. Replace the tire if you can see fabric or cord.
- Excessive tread wear.

CONTINUED

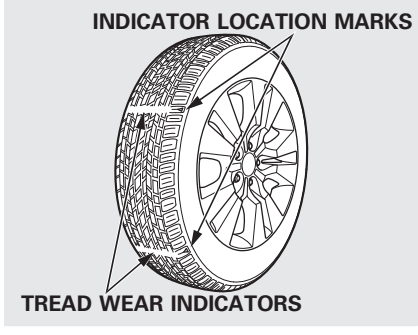

Your tires have wear indicators molded into the tread. When the tread wears down, you will see a 1/2 inch (12.7 mm) wide band across the tread. This shows there is less than 1/16 inch (1.6 mm) of tread left on the tire.

A tire this worn gives very little traction on wet roads. You should replace the tire if you can see three or more tread wear indicators.

Tire Service Life

The service life of your tires is dependent on many factors, including, but not limited to, driving habits, road conditions, vehicle loading, inflation pressure, maintenance history, speed, and environmental conditions (even when the tires are not in use).

In addition to your regular inspections and inflation pressure maintenance, it is recommended that you have annual inspections performed once the tires reach five years old. It is also recommended that all tires, including the spare, be removed from service after 10 years from the date of manufacture, regardless of their condition or state of wear.

The last four digits of the TIN (tire identification number) are found on the sidewall of the tire and indicate the date of manufacture (See **Tire Labeling** on page 484).

Tire Maintenance

In addition to proper inflation, correct wheel alignment helps to decrease tire wear. If you find a tire is worn unevenly, have your dealer check the wheel alignment.

Have your dealer check the tires if you feel a consistent vibration while driving. A tire should always be rebalanced if it is removed from the wheel. When you have new tires installed, make sure they are balanced. This increases riding comfort and tire life. For best results, have the installer perform a dynamic balance.

NOTICE

Improper wheel weights can damage your vehicle's aluminum wheels. Use only Acura wheel weights for balancing.

Tire Rotation

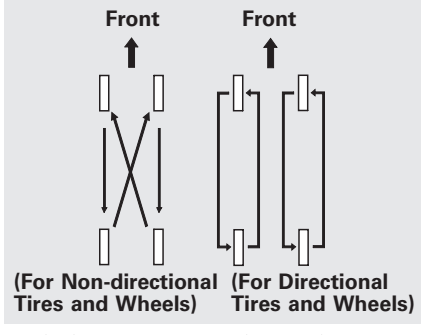

To help increase tire life and distribute wear more evenly, rotate the tires according to the maintenance messages displayed on the multi-information display. Move the tires to the positions shown in the illustration each time they are rotated. If you purchase directional tires, rotate only front-to-back.

Replacing Tires and Wheels

Replace your tires with radial tires of the same size, load range, speed rating, and maximum cold tire pressure rating (as shown on the tire's sidewall).

Mixing radial and bias-ply tires on your vehicle can reduce braking ability, traction, and steering accuracy. Using tires of a different size or construction can cause the ABS and vehicle stability assist system (VSA) to work inconsistently.

The ABS and VSA system work by comparing the speed of the wheels. When replacing tires, use the same size originally supplied with the vehicle. Tire size and construction can affect wheel speed and may cause the ABS or VSA system to activate.

It is best to replace all four tires at the same time. If that is not possible or necessary, replace the two front tires or two rear tires as a pair. Replacing just one tire can seriously affect your vehicle's handling.

If you ever replace a wheel, make sure that the wheel's specifications match those of the original wheels.

Also be sure you use only TPMS specific wheels. If you do not, the tire pressure monitoring system will not work.

Replacement wheels are available at your dealer.

CONTINUED

⚠WARNING

Installing improper tires on your vehicle can affect handling and stability. This can cause a crash in which you can be seriously hurt or killed.

Always use the size and type of tires recommended in this owner's manual.

Wheel and Tire Specifications
Wheels:

18 x 7 1/2J (TPMS)

Tires:

P235/55R18 99V

See page 482 for information about DOT Tire Quality Grading, and page 484 for tire size and labeling information.

Winter Driving
Tires marked "M + S" or "All Season" on the sidewall have an all-weather tread design suitable for most winter driving conditions.

For the best performance in snowy or icy conditions, you should install snow tires or tire chains. They may be required by local laws under certain conditions.

Snow Tires
If you mount snow tires on your vehicle, make sure they are radial tires of the same size and load range as the original tires. Mount snow tires on all four wheels. The traction provided by snow tires on dry roads may be lower than your original tires. Check with the tire dealer for maximum speed recommendations.

Tire Chains
Mount tire chains on your tires when required by driving conditions or local laws. Install them only on the front tires.

Because your vehicle has limited tire clearance, Acura strongly recommends using the chains listed below, made by Security Chain Company (SCC).

Cable type: Shur Grip Z
SZ343

When installing cables, follow the manufacturer's instructions, and mount them as tight as you can. Make sure they are not contacting the brake lines or suspension. Drive slowly with them installed. If you hear them coming into contact with the body or chassis, stop and investigate. Remove them as soon as you begin driving on cleared roads.

NOTICE

Traction devices that are the wrong size or improperly installed can damage your vehicle's brake lines, suspension, body, and wheels. Stop driving if they are hitting any part of the vehicle.

⚠WARNING

Using the wrong chains, or not properly installing chains, can damage the brake lines and cause a crash in which you can be seriously injured or killed.

Follow all instructions in this owner's manual regarding the selection and use of tire chains.

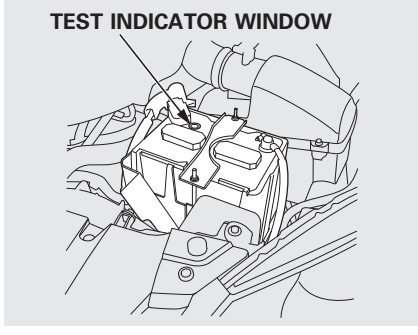

Check the condition of the battery monthly by looking at the test indicator window. The label on the battery explains the test indicator's colors.

Check the terminals for corrosion (a white or yellowish powder). To remove it, cover the terminals with a solution of baking soda and water. It will bubble up and turn brown. When this stops, wash it off with plain water. Dry off the battery with a cloth or paper towel. Coat the terminals with grease to help prevent future corrosion.

If additional battery maintenance is needed, see your dealer or a qualified technician.

WARNING: Battery posts, terminals, and related accessories contain lead and lead compounds. **Wash your hands after handling.**

If you need to connect the battery to a charger, disconnect both cables to prevent damaging your vehicle's electrical system. Always disconnect the negative (−) cable first, and reconnect it last.

⚠WARNING

The battery gives off explosive hydrogen gas during normal operation.

A spark or flame can cause the battery to explode with enough force to kill or seriously hurt you.

Wear protective clothing and a face shield, or have a skilled technician do the battery maintenance.

On models without navigation system
If your vehicle's battery is disconnected, or goes dead, the time is reset to 1:00. To set the time again, follow the setting procedure (see page 293).

If your vehicle's battery is disconnected or goes dead, the audio system will disable itself. The next time you turn on the radio you will see " ENTER CODE " in the frequency display. Use the preset bars or preset buttons (depending on the model) to enter the five-digit code (see page 291).

On models with navigation system
The navigation system will also disable itself. The next time you turn on the ignition switch, the system will require you to enter a PIN before it can be used. Refer to the navigation system manual.

Vehicle Storage
If you need to park your vehicle for an extended period (more than 1 month), there are several things you should do to prepare it for storage. Proper preparation helps prevent deterioration and makes it easier to get your vehicle back on the road. If possible, store your vehicle indoors.

- Fill the fuel tank.
- Wash and dry the exterior completely.
- Clean the interior. Make sure the carpeting, floor mats, etc., are completely dry.
- Leave the parking brake off. Put the transmission in Park.

CONTINUED

- Block the rear wheels.
- If the vehicle is to be stored for a longer period, it should be supported on jackstands so the tires are off the ground.
- Leave one window open slightly (if the vehicle is being stored indoors).
- Disconnect the battery.
- Support the front and rear wiper blade arms with a folded towel or rag so they do not touch the windshield.
- To minimize sticking, apply a silicone spray lubricant to all door and tailgate seals. Also, apply a vehicle body wax to the painted surfaces that mate with the door and tailgate seals.
- Cover the vehicle with a "breathable" cover, one made from a porous material such as cotton. Non-porous materials, such as plastic sheeting, trap moisture, which can damage the paint.
- If possible, periodically run the engine until it reaches full operating temperature (the cooling fans cycle on and off twice). Preferably, do this once a month.

Interior Care

Leather

Vacuum dirt and dust from the leather frequently. Pay close attention to the pleats and seams. Clean the leather with a soft cloth dampened with a 90% water and 10% neutral wool detergent solution. Then buff it with a clean, dry cloth. Remove any dust or dirt on leather surfaces immediately.

This section covers the more common problems that motorists experience with their vehicles. It gives you information about how to safely evaluate the problem and what to do to correct it. If the problem has stranded you on the side of the road, you may be able to get going again. If not, you will also find instructions on getting your vehicle towed.

Compact Spare Tire 454
Changing a Flat Tire 455
If the Engine Won't Start..... 459
Jump Starting..... 461
If the Engine Overheats 463
Low Oil Pressure Indicator 465
Charging System Indicator 465
Malfunction Indicator Lamp..... 466
Brake System Indicator..... 467
Fuses 469
Fuse Locations..... 473
Emergency Towing..... 475

Use the compact spare tire as a temporary replacement only. Get your regular tire repaired or replaced, and put it back on your vehicle as soon as you can.

Check the inflation pressure of the compact spare tire every time you check the other tires. It should be inflated to:

60 psi (420 kPa , 4.2 kgf/cm^2)

Follow these precautions:

- Never exceed 50 mph (80 km/h).
- This tire gives a harsher ride and less traction on some road surfaces. Use greater caution while driving.
- Do not mount snow chains on the compact spare tire.
- Do not use your compact spare tire on another vehicle unless it is the same make and model.
- After the flat tire is replaced with the spare tire, the low tire pressure/TPMS indicator stays on. After several miles (kilometers) driving with the spare, this indicator begins to flash, then stays on again. You will also see a "CHECK TPMS SYSTEM" message on the multi-information display (see page 393).

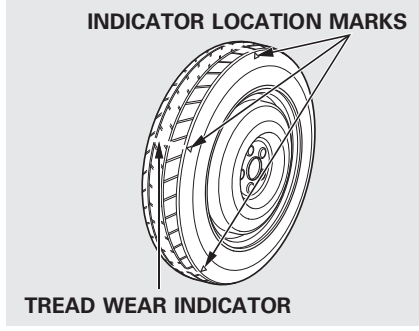

Replace the tire when you can see the tread wear indicator bars. The replacement should be the same size and design tire, mounted on the same wheel. The spare tire is not designed to be mounted on a regular wheel, and the spare wheel is not designed for mounting a regular tire.

If you have a flat tire while driving, stop in a safe place to change it. Drive slowly along the shoulder until you get to an exit or an area that is far away from the traffic lanes.

⚠WARNING

The vehicle can easily roll off the jack, seriously injuring anyone underneath.

Follow the directions for changing a tire exactly, and never get under the vehicle when it is supported only by the jack.

1. Park the vehicle on firm, level, and non-slippery ground. Put the transmission in Park. Apply the parking brake.
   If you are towing a trailer, unhitch it.
2. Turn on the hazard warning lights, and turn the ignition switch to the LOCK (0) position. Have all passengers get out of the vehicle while you change the tire.

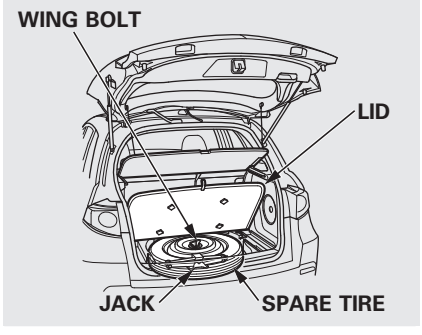

3. Open the tailgate. Raise the cargo area floor lid by lifting it up with the strap, then remove the lid. The spare tire, jack, and tools are under the cargo area floor.
4. Unscrew the wing bolt. Use the hooked end of the wheel nut wrench extension as a wrench if the wing bolt is hard to loosen. Then take the spare tire out of the cargo area.

CONTINUED

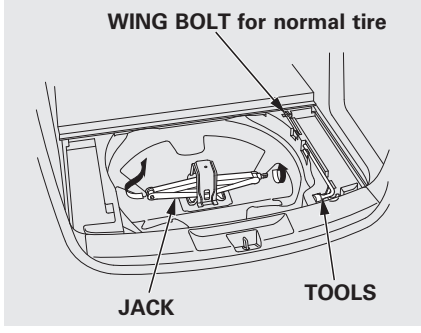

5. Remove the tools, wing bolt and the jack. To remove the jack, turn the jack's end bracket counterclockwise to loosen it.

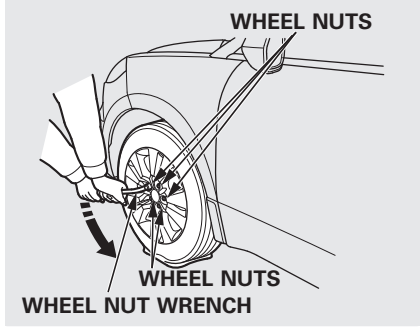

6. Loosen the five wheel nuts 1/2 turn with the wheel nut wrench.

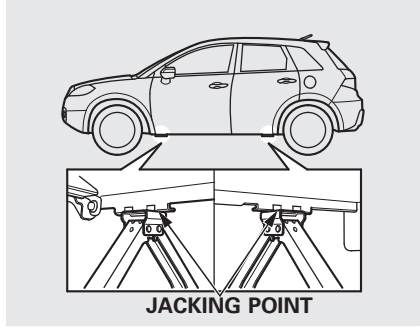

7. Place the jack under the jacking point nearest the tire you need to change. Turn the end bracket clockwise until the top of the jack contacts the jacking point. Make sure the jacking point tab is resting in the jack notch.

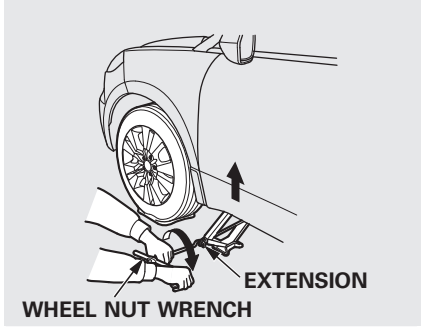

8. Use the extension and the wheel nut wrench as shown to raise the vehicle until the flat tire is off the ground.
9. Remove the wheel nuts, then remove the flat tire. Handle the wheel nuts carefully; they may be hot from driving. Place the flat tire on the ground with the outside surface facing up.

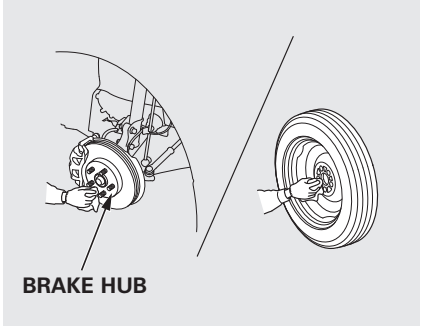

10. Before mounting the spare tire, wipe any dirt off the mounting surface of the wheel and hub with a clean cloth. Wipe the hub carefully; it may be hot from driving.
11. Put on the spare tire. Put the wheel nuts back on finger-tight, then tighten them in a crisscross pattern with the wheel nut wrench until the wheel is firmly against the hub. Do not try to tighten the wheel nuts fully.
12. Lower the vehicle to the ground, and remove the jack.

CONTINUED

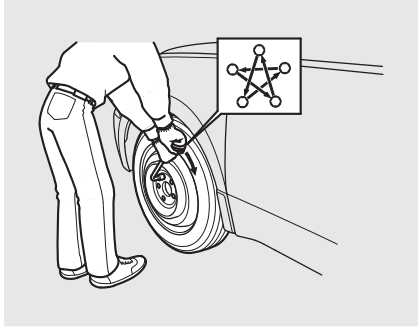

13. Tighten the wheel nuts securely in the same crisscross pattern. Have the wheel nut torque checked at the nearest automotive service facility.
    Tighten the wheel nuts to:
    80 lbf·ft (108 N·m, 11 kgf·m)
14. Store the jack in its holder. Turn the jack's end bracket to lock it in place. Store the tools.

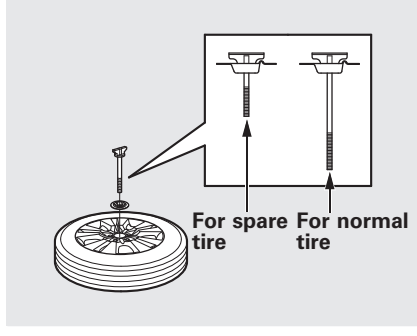

15. Remove the center cap from the flat tire, and store it in the cargo area.
16. Place the flat tire face up in the cargo area.
17. Secure the flat tire by screwing the wing bolt back into its hole.

⚠WARNING

Loose items can fly around the interior in a crash and could seriously injure the occupants.

Store the wheel, jack, and tools securely before driving.

18. Reinstall the cargo area floor, and close the tailgate.
19. Your vehicle's original tire has a tire pressure monitoring system sensor. To replace a tire, refer to **Changing a Tire with TPMS** (see page 394).

Diagnosing why the engine won't start falls into two areas, depending on what you hear when you turn the ignition switch to the START (III) position:

- You hear nothing, or almost nothing. The engine's starter motor does not operate at all, or operates very slowly.
- You can hear the starter motor operating normally, or the starter motor sounds like it is spinning faster than normal, but the engine does not start up and run.

Nothing Happens or the Starter Motor Operates Very Slowly

When you turn the ignition switch to the START (III) position, you do not hear the normal noise of the engine trying to start. You may hear a clicking sound, a series of clicks, or nothing at all.

Check these things:

- Check the transmission interlock. The transmission must be in Park or neutral or the starter will not operate.
- Turn the ignition switch to the ON (II) position. Turn on the headlights, and check their brightness. If the headlights are very dim or do not come on at all, the battery is discharged. See **Jump Starting** on page 461.
- Turn the ignition switch to the START (III) position. If the headlights do not dim, check the condition of the fuses. If the fuses are OK, there is probably something wrong with the electrical circuit for the ignition switch or starter motor. You will need a qualified mechanic to determine the problem (see **Emergency Towing** on page 475).

If the headlights dim noticeably or go out when you try to start the engine, either the battery is discharged or the connections are corroded. Check the condition of the battery and terminal connections (see page 450). You can then try jump starting the vehicle from a booster battery (see page 461).

CONTINUED

The Starter Operates Normally
In this case, the starter motor's speed sounds normal, or even faster than normal, when you turn the ignition switch to the START (III) position, but the engine does not run.

- Are you using a properly coded key? An improperly coded key will cause the immobilizer system indicator in the instrument panel to blink rapidly (see page 124).
- Are you using the proper starting procedure? Refer to **Starting the Engine** on page 374.
- Do you have fuel? Check the fuel gauge; the low fuel indicator may not be working.
- There may be an electrical problem, such as no power to the fuel pump. Check all the fuses (see page 470).

If you find nothing wrong, you will need a qualified technician to find the problem. See **Emergency Towing** on page 475.

Although this seems like a simple procedure, you should take several precautions.

⚠WARNING

A battery can explode if you do not follow the correct procedure, seriously injuring anyone nearby.

Keep all sparks, open flames, and smoking materials away from the battery.

You cannot start your vehicle by pushing or pulling it.

To Jump Start Your Vehicle:

1. Open the hood, and check the physical condition of the battery. In very cold weather, check the condition of the electrolyte. If it seems slushy or frozen, do not try jump starting until it thaws.

NOTICE

If a battery sits in extreme cold, the electrolyte inside can freeze. Attempting to jump start with a frozen battery can cause it to rupture.

2. Turn off all electrical accessories: heater, A/C, climate control, audio system, lights, etc. Put the transmission in Park, and set the parking brake.

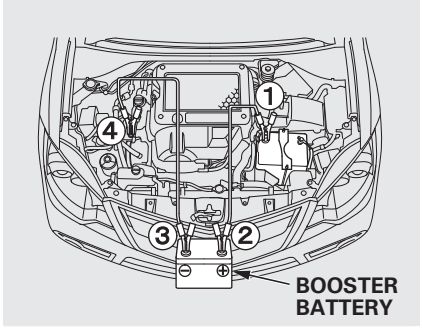

The numbers in the illustration show you the order to connect the jumper cables.

CONTINUED

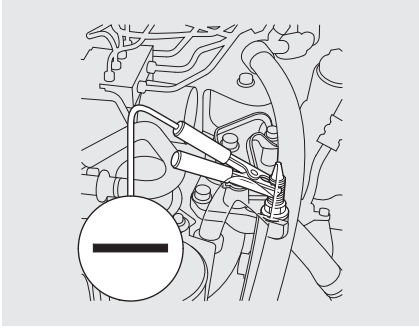

3. Connect one jumper cable to the positive (+) terminal on your battery. Connect the other end to the positive (+) terminal on the booster battery.
4. Connect the second jumper cable to the negative (−) terminal on the booster battery. Connect the other end to the grounding point as shown. Do not connect this jumper cable to any other part of the engine.
5. If the booster battery is in another vehicle, have an assistant start that vehicle and run it at a fast idle.
6. Start your vehicle. If the starter motor still operates slowly, check that the jumper cables have good metal-to-metal contact.
7. Once your vehicle is running, disconnect the negative cable from your vehicle, then from the booster battery. Disconnect the positive cable from your vehicle, then from the booster battery.

Keep the ends of the jumper cables away from each other and any metal on the vehicle until everything is disconnected. Otherwise, you may cause an electrical short.

The reading of the vehicle's temperature gauge on the multi-information display should stay in the midrange. If it climbs to the H (Hot) mark, you should determine the reason (hot day, driving up a steep hill, etc.).

If the coolant temperature rises to 224°F (118°C) or more, the temperature gauge will appear on the display and blink for several times. At the same time, the beeper will sound once.

If your vehicle overheats, you should take immediate action. The only indication may be the temperature gauge climbing to the H (Hot) mark. Or you may see steam or spray coming from under the hood.

NOTICE

Driving with the temperature gauge reading at the H (Hot) mark can cause serious damage to the engine.

⚠WARNING

Steam and spray from an overheated engine can seriously scald you.

Do not open the hood if steam is coming out.

1. Safely pull to the side of the road. Put the transmission in Park, and set the parking brake. Turn off all accessories, and turn on the hazard warning lights.
2. If you see steam and/or spray coming from under the hood, turn off the engine. Wait until you see no more signs of steam or spray, then open the hood.
3. If you do not see steam or spray, leave the engine running and watch the temperature gauge. If the high heat is due to overloading, the engine should start to cool down almost immediately. If it does, wait until the temperature gauge comes down to the midpoint, then continue driving.
4. If the temperature gauge reading stays at the H (Hot) mark, turn off the engine.

CONTINUED

5. Look for any obvious coolant leaks, such as a split radiator hose. Everything is still extremely hot, so use caution. If you find a leak, it must be repaired before you continue driving (see **Emergency Towing** on page 475).
6. If you do not find an obvious leak, check the coolant level in the radiator reserve tank. Add coolant if the level is below the MIN mark.
7. If there was no coolant in the reserve tank, you may need to add coolant to the radiator. Let the engine cool down until the reading reaches the middle of the temperature gauge or lower before checking the radiator.

⚠WARNING

Removing the radiator cap while the engine is hot can cause the coolant to spray out, seriously scalding you.

Always let the engine and radiator cool down before removing the radiator cap.

8. Using gloves or a large heavy cloth, turn the radiator cap counterclockwise, without pushing down, to the first stop. After the pressure releases, push down on the cap, and turn it until it comes off.
9. Start the engine, and set the temperature to maximum heat (climate control to AUTO at "H"). Add coolant to the radiator up to the base of the filler neck. If you do not have the proper coolant mixture available, you can add plain water. Remember to have the cooling system drained and refilled with the proper mixture as soon as you can.
10. Put the radiator cap back on tightly. Run the engine, and watch the temperature gauge. If it goes back to the H mark, the engine needs repair (see **Emergency Towing** on page 475).
11. If the temperature stays normal, check the coolant level in the radiator reserve tank. If it has gone down, add coolant to the MAX mark. Put the cap back on tightly.

Low Oil Pressure Indicator



This indicator should never come on when the engine is running. If it starts flashing or stays on, the oil pressure has dropped very low or lost pressure. Serious engine damage is possible, and you should take immediate action.

You will also see an “OIL PRESSURE LOW” message on the multi-information display (see page 79).

The indicator notifies you of low oil pressure and does not measure the oil level. Check your vehicle's oil level at each refueling.

NOTICE

Running the engine with low oil pressure can cause serious mechanical damage almost immediately. Turn off the engine as soon as you can safely get the vehicle stopped.

1. Safely pull off the road, and shut off the engine. Turn on the hazard warning lights.
2. Let the vehicle sit for a minute. Open the hood, and check the oil level (see page 357). An engine very low on oil can lose pressure during cornering and other driving maneuvers.
3. If necessary, add oil to bring the level back to the full mark on the dipstick (see page 420).
4. Start the engine, and watch the oil pressure indicator. If it does not go out within 10 seconds, turn off the engine. There is a mechanical problem that needs to be repaired before you can continue driving (see **Emergency Towing** on page 475).

Charging System Indicator



If the charging system indicator comes on brightly when the engine is running, the battery is not being charged.

You will also see a “CHECK CHARGING SYSTEM” message on the multi-information display (see page 79).

Immediately turn off all electrical accessories. Try not to use other electrically operated controls such as the power windows. Keep the engine running; starting the engine will discharge the battery rapidly.

Go to a service station or garage where you can get technical assistance.



If the indicator comes on while driving, it means one of the engine's emissions control systems may have a problem. Even though you may feel no difference in your vehicle's performance, it can reduce your fuel economy and cause increased emissions. Continued operation may cause serious damage.

If you have recently refueled your vehicle, the indicator coming on could be due to a loose or missing fuel fill cap. You will also see a "TIGHTEN FUEL CAP" message on the multi-information display. Tighten the cap until it clicks at least once. Tightening the cap will not turn the indicator off immediately; it can take several days of normal driving.

If the indicator comes on repeatedly, even though it may turn off as you continue driving, have your vehicle checked by your dealer as soon as possible.

NOTICE

If you keep driving with the malfunction indicator lamp on, you can damage your vehicle's emissions controls and engine. Those repairs may not be covered by your vehicle's warranties.

The indicator may also come on with the "D" indicator.

You will also see a "CHECK EMISSION SYSTEM" message on the multi-information display (see page 79).

Readiness Codes

Your vehicle has certain "readiness codes" that are part of the on-board diagnostics for the emissions systems. In some states, part of the emissions testing is to make sure these codes are set. If they are not set, the test cannot be completed.

If the battery in your vehicle has been disconnected or gone dead, these codes may be erased. It can take several days of driving under various conditions to set the codes again.

To check if they are set, turn the ignition switch to the ON (II) position, without starting the engine. The malfunction indicator lamp will come on for 20 seconds. If it then goes off, the readiness codes are set. If it blinks five times, the readiness codes are not set. If possible, do not take your vehicle for an emissions test until the readiness codes are set. Refer to **Emissions Testing** for more information (see page 490).

Brake System Indicator (Red)

U.S. Canada



The brake system indicator (red) normally comes on when you turn the ignition switch to the ON (II) position, and as a reminder to check the parking brake. It will stay on if you do not fully release the parking brake.

If the brake system indicator (red) comes on while driving, the brake fluid level is probably low. Press lightly on the brake pedal to see if it feels normal. If it does, check the brake fluid level the next time you stop at a service station (see page 429).

You will also see a “BRAKE FLUID LOW” message on the multi-information display (see page 79).

If the fluid level is low, take your vehicle to a dealer, and have the brake system inspected for leaks or worn brake pads.

However, if the brake pedal does not feel normal, you should take immediate action. A problem in one part of the system's dual circuit design will still give you braking at two wheels. You will feel the brake pedal go down much farther before the vehicle begins to slow down, and you will have to press harder on the pedal.

You will also see a “CHECK BRAKE SYSTEM” message on the multi-information display (see page 79).

Slow down by shifting to a lower gear, and pull to the side of the road when it is safe. Because of the long distance needed to stop, it is hazardous to drive the vehicle. You should have it towed, and repaired as soon as possible (see **Emergency Towing** on page 475).

If you must drive the vehicle a short distance in this condition, drive slowly and carefully.

If the ABS indicator and the VSA system indicator come on with the brake system indicator, have your vehicle inspected by your dealer immediately.

Brake System Indicator (Amber)

U.S. Canada



Your vehicle has an electric vacuum pump located in the engine compartment. It enhances the effectiveness of your vehicle's brake system more frequently when you drive in cold weather or thinner air at high altitude after the engine is started.

When the electric vacuum pump is in operation, it makes some mechanical noises come from the engine compartment. This is normal.

The brake system indicator (amber) on the instrument panel normally comes on when you turn the ignition switch to the ON (II) position and goes off after the engine starts. If it comes on at any other time, press on the brake pedal with your foot several times until the indicator turns off. If the indicator is still on or comes on again after this procedure, there is a problem in the brake system including the electric vacuum pump. If this happens, the brake pedal might feel heavy when you press it. Have your vehicle checked by your dealer.

You will also see a “CHECK BRAKE SYSTEM” message on the multi-information display (see page 79).

INTERIOR

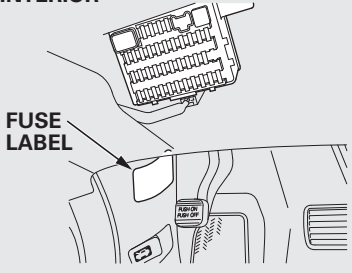

The vehicle's fuses are contained in three fuse boxes.

The interior fuse box is on the driver's lower left side.

UNDER-HOOD (PRIMARY)

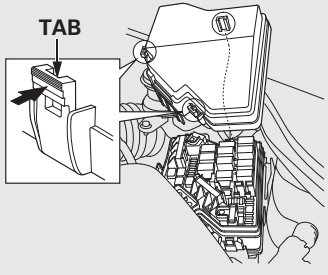

The primary under-hood fuse box is in the engine compartment on the driver's side. To open it, push the tabs as shown.

UNDER-HOOD (SECONDARY)

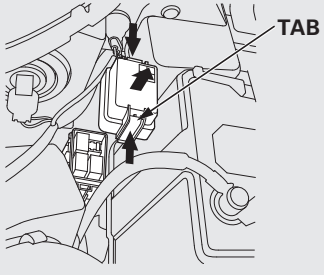

The secondary under-hood fuse box is next to the battery. To open it, push the tabs as shown.

CONTINUED

Checking and Replacing Fuses
If something electrical in your vehicle stops working, the first thing you should check for is a blown fuse. Determine from the chart on pages 473 and 474, or the diagram on the fuse box lid, which fuse or fuses control that device. Check those fuses first, but check all the fuses before deciding that a blown fuse is the cause. Replace any blown fuses, and check if the device works.

1. Turn the ignition switch to the LOCK (0) position. Make sure the headlights and all other accessories are off.
2. (Under-hood fuse boxes) Remove the cover from the fuse box.

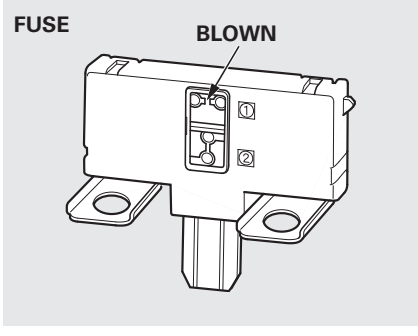

3. Check each of the large fuses in the under-hood fuse box by looking through the side window at the wire inside. Remove the screws with a Phillips-head screwdriver.

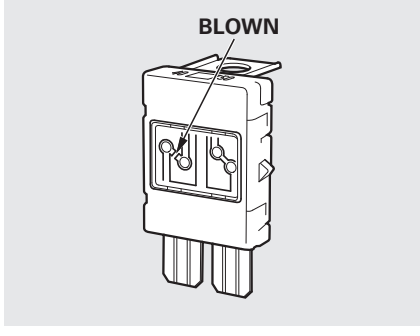

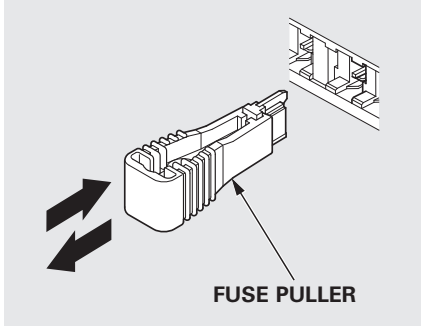

4. Check the smaller fuses in the under-hood fuse box and all the fuses in the interior fuse box by pulling out each one with the fuse puller provided on the back of the primary under-hood fuse box cover.

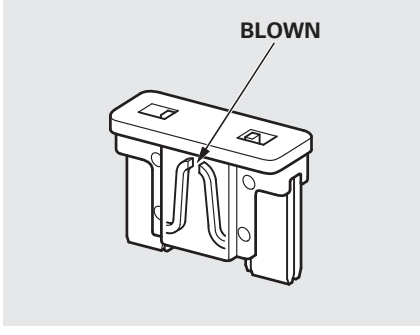

5. Look for a blown wire inside the fuse. If it is blown, replace it with one of the spare fuses of the same rating or lower. The spare fuses are provided on the back of the under-hood fuse cover.

If you cannot drive the vehicle without fixing the problem, and you do not have a spare fuse, take a fuse of the same rating or a lower rating from one of the other circuits. Make sure you can do without that circuit temporarily (such as the accessory power socket or radio).

If you replace the blown fuse with a spare fuse that has a lower rating, it might blow out again. This does not indicate that anything is wrong. Replace the fuse with one of the correct rating as soon as you can.

CONTINUED

NOTICE

Replacing a fuse with one that has a higher rating greatly increases the chances of damaging the electrical system. If you do not have a replacement fuse with the proper rating for the circuit, install one with a lower rating.

6. If the replacement fuse of the same rating blows in a short time, there is probably a serious electrical problem in your vehicle. Leave the blown fuse in that circuit and have your vehicle checked by a qualified technician.

On models without navigation system
When the audio system is disabled, the clock setting in the audio system will be canceled. You will need to reset the clock (see page 293).

On models with navigation system
If the navigation system fuse is removed, the navigation system will disable itself. The next time you turn on the ignition switch, the system will require you to enter a PIN before it can be used. Refer to the navigation system manual.

INTERIOR FUSE BOX

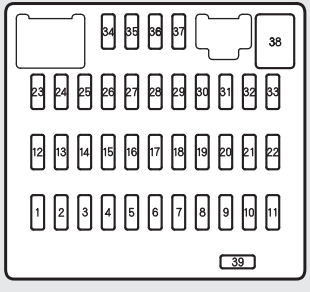

No.	Amps.	Circuits Protected
1	7.5 A	Power Window/SH-AWD*
2	20 A	Fuel Pump
3	15 A	ACG
4	7.5 A	ABS/VSA
5	15 A	Heated Seat
6	20 A	FR Fog Lights
7	7.5 A	Driver's Power Seat Lumbar Support
8	10 A	RR Wiper

No.	Amps.	Circuits Protected
9	7.5 A	OPDS
10	7.5 A	Meter
11	10 A	SRS
12	10 A	Right Headlight High
13	10 A	Left Headlight High
14	7.5 A	Small Lights (Interior)
15	15 A	Small Lights (Exterior)
16	15 A	Right Headlight Low
17	15 A	Left Headlight Low

No.	Amps.	Circuits Protected
18	20 A	Headlight High Main
19	20 A	Small Lights Main
20	7.5 A	TPMS
21	30 A	Headlight Low Main
22	–	Not Used
23	7.5 A	Starter Diagnosis
24	20 A	Moonroof
25	20 A	Door Lock
26	20 A	Driver's Power Window
27	–	Not Used
28	15 A	Accessory Socket (Console Compartment)
29	15 A	Accessory Socket (Front)
30	20 A	Passenger's Power Window
31	20 A	Radio Amplifier
32	20 A	Right Rear Power Window
33	20 A	Left Rear Power Window
34	–	Not Used
35	7.5 A	Radio
36	10 A	HAC
37	7.5 A	Daytime Running Light
38	30 A	FR Wiper
39	7.5 A	STS

*: SH-AWD models only

CONTINUED

Fuse Locations

UNDER-HOOD FUSE BOXES PRIMARY

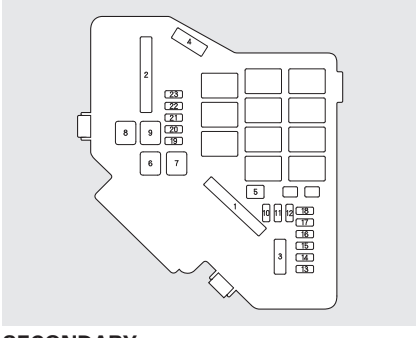

SECONDARY

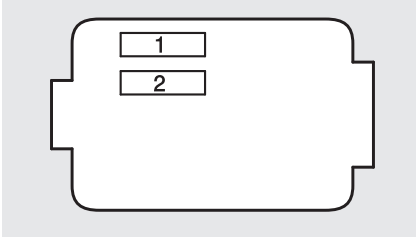

Primary Fuse Box

No.	Amps.	Circuits Protected
1	100 A	Main Fuse
	30 A	SH-AWD*
2	80 A	Option Main
	50 A	Ignition Switch Main
3	40 A	ABS/VSA Motor
	20 A	ABS/VSA Fail Safe
4	50 A	Headlight Main
	40 A	Power Window Main
5	30 A	Passenger's Power Seat Reclining
6	30 A	Main Fan Motor
7	30 A	Sub Fan Motor
8	30 A	Rear Defogger
9	40 A	Blower
10	15 A	Hazard

Secondary Fuse Box

No.	Amps.	Circuits Protected
1	7.5 A	Electric Vacuum Pump
2	20 A	Passenger's Power Seat Reclining

No.	Amps.	Circuits Protected
11	15 A	LAF
12	15 A	Stop & Horn
13	20 A	Driver's Power Seat Reclining
14	20 A	Driver's Power Seat Sliding
15	7.5 A	IGPS Oil Level
16	20 A	Passenger's Power Seat Sliding
17	15 A	Electric Vacuum Pump
18	15 A	IG Coil
19	15 A	FI Main
20	7.5 A	MG Clutch
21	15 A	DBW
22	7.5 A	Interior Light
23	10 A	Back Up

*: On SH-AWD models only

If your vehicle needs to be towed, call a professional towing service or organization. Never tow your vehicle with just a rope or chain. It is very dangerous.

(On SH-AWD models)
The only way you can safely tow your vehicle is with flat-bed equipment. The operator will load your vehicle on the back of a truck. Any other method of towing will damage the drive system. When you contact the towing agency, inform them a flat-bed is required.

NOTICE

Towing with only two tires on the ground will damage parts of the all-wheel-drive system. Your vehicle should be transported on a flat-bed truck or trailer.

(Execpt SH-AWD models)
There are two ways to tow your vehicle:

Flat-bed Equipment − The operator loads your vehicle on the back of a truck. **This is the best way to transport your vehicle.**

Wheel-lift Equipment − The tow truck uses two pivoting arms that go under the front tires and lift them off the ground. The rear tires remain on the ground. **This is an acceptable way to tow your vehicle.**

If, due to damage, your vehicle must be towed with the front wheels on the ground, do this:

- Start the engine.
- Shift to the D position and hold for 5 seconds, then to N.
- Turn off the engine.
- Leave the ignition switch in the ACCESSORY (I) position so the steering wheel does not lock.
- Release the parking brake.

CONTINUED

NOTICE

Improper towing preparation will damage the transmission. Follow the above procedure exactly. If you cannot shift the transmission or start the engine, your vehicle must be transported with the front wheels off the ground.

With the front wheels on the ground, do not tow the vehicle more than 50 miles (80 km), and keep the speed below 35 mph (55 km/h).

NOTICE

Trying to lift or tow your vehicle by the bumpers will cause serious damage. The bumpers are not designed to support the vehicle's weight.

NOTICE

The steering system can be damaged if the steering wheel is locked. Leave the ignition switch in the ACCESSORY (I) position, and make sure the steering wheel turns freely before you begin towing.

The diagrams in this section give you the dimensions and capacities of your vehicle and the locations of the identification numbers. It also includes information you should know about your vehicle's tires and emissions control systems.

Identification Numbers 478
Specifications 480
DOT Tire Quality Grading (U.S. Vehicles) 482
Uniform Tire Quality Grading 482
Treadwear 482
Traction 482
Temperature 483
Tire Labeling 484
Tire Pressure Monitoring System (TPMS) − Required Federal Explanation 485
Emissions Controls 487
The Clean Air Act 487
Crankcase Emissions Control System 487
Evaporative Emissions Control System 487
Onboard Refueling Vapor Recovery 488
Exhaust Emissions Controls 488
Replacement Parts 488
Three Way Catalytic Converter 489
Emissions Testing 490

Identification Numbers

Your vehicle has several identifying numbers located in various places.

The vehicle identification number (VIN) is the 17-digit number your dealer uses to register your vehicle for warranty purposes. It is also necessary for licensing and insuring your vehicle. The easiest place to find the VIN is on a plate fastened to the top of the dashboard. You can see it by looking through the windshield on the driver's side. It is also on the certification label attached to the driver's doorjamb, and is stamped on the engine compartment bulkhead. The VIN is also provided in bar code on the certification label.

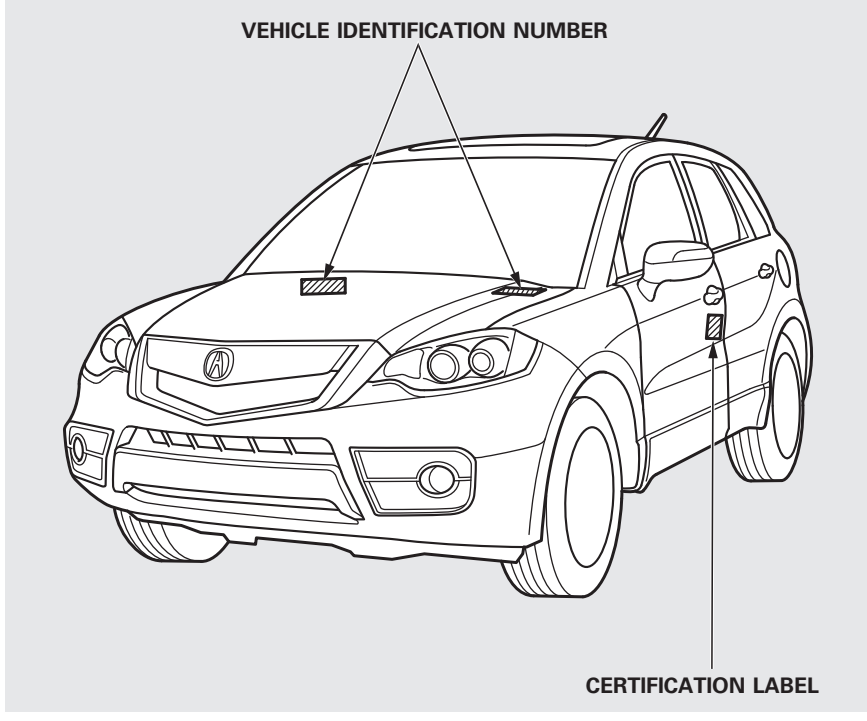

The engine number is stamped into the front of the engine block.

The transmission number is on a label on top of the transmission.

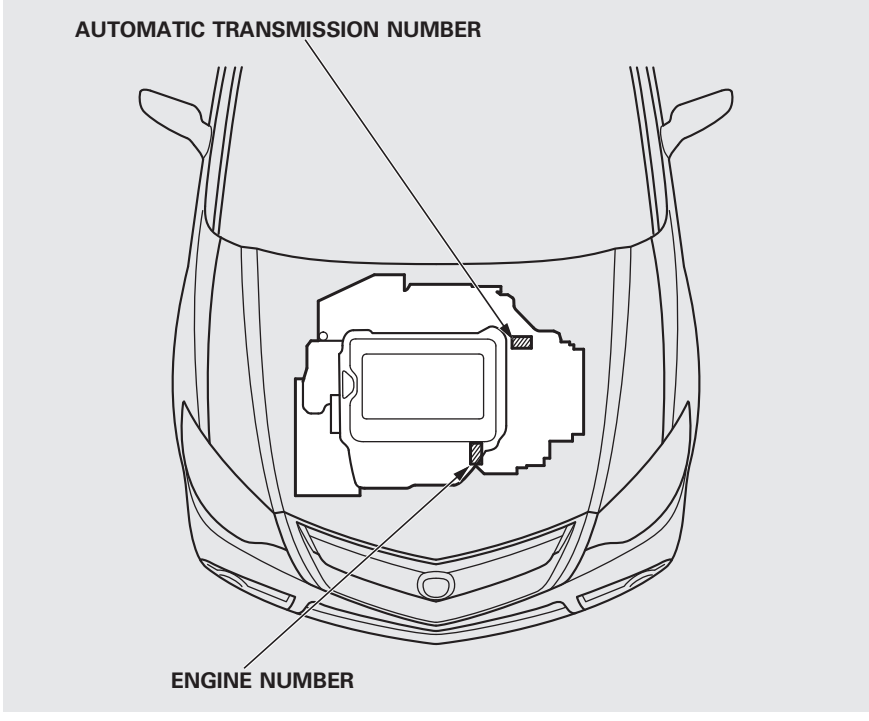

Specifications

Dimensions

Length		182.5 in (4,635 mm)
Width		73.6 in (1,870 mm)
Height		65.2 in (1,655 mm)
Wheelbase		104.3 in (2,650 mm)
Track	Front	61.9 in (1,572 mm)
	Rear	62.6 in (1,590 mm)

Weights

Gross vehicle weight rating	See the certification label attached to the driver's doorjamb.

Engine

Type	Water cooled 4-stroke DOHC i-VTEC 4 cylinder gasoline engine with turbo charger, intercooler
Bore x Stroke	3.39 x 3.90 in (86.0 x 99.0 mm)
Displacement	140.3 cu-in (2,300 cm^3)
Compression ratio	8.8
Spark plugs	SILKR8A-S (NGK)

Seating Capacities

Total	5
Front	2
Rear	3

Capacities

Fuel tank			Approx. 18.0 US gal (68 L)
Engine oil	Change*1		
		Including filter	5.0 US qt (4.7 L)
		Without filter	4.8 US qt (4.5 L)
	Total		6.1 US qt (5.8 L)
Engine coolant	Change*2		1.85 US gal (7.0 L)
	Total		2.22 US gal (8.4 L)
Automatic transmission fluid	Change		
		2WD	3.0 US qt (2.8 L)
		SH-AWD	3.1 US qt (2.9 L)
	Total		
		2WD	8.8 US qt (8.3 L)
		SH-AWD	8.2 US qt (7.8 L)
Rear differential fluid (SH-AWD)	Change		2.67 US qt (2.53 L)
	Total		2.93 US qt (2.77 L)
Transfer assembly fluid (SH-AWD)	Change		0.45 US qt (0.43 L)
	Total		0.48 US qt (0.45 L)
Windshield washer reservoir	U.S. Vehicles		2.6 US qt (2.5 L)
	Canada Vehicles		4.8 US qt (4.5 L)

*1: Excluding the oil remaining in the engine

*2: Including the coolant in the reserve tank and that remaining in the engine
Reserve tank capacity:
0.18 US gal (0.7 L)

Lights

Headlights	High	12 V — 60 W (HB3)
	Low*	12 V — 35 W (D2S)
Front turn signal/parking lights		12 V — 24/2.2 CP (Amber)
Front fog lights		12 V — 55 W (H11)
Front side marker lights		12 V — 3 CP
Rear turn signal lights		12 V — 21 W
Brake/Taillights (in fenders)		12 V — 21/5 W
Taillights (in tailgate)		12 V — 3 CP
Back-up lights		12 V — 21 W
Rear side marker lights		12 V — 2 CP
License plate lights		12 V — 3 CP
High-mount brake light		12 V — 16 W
Front ceiling lights/Spotlights		12 V — 4 CP
Rear ceiling light		12 V — 8 W
Glove box light		14 V — 1.4 W
Console compartment light		14 V — 1.4 W
Vanity mirror lights		12 V — 2 W
Door courtesy lights		12 V — 2 CP
Cargo area light		12 V — 5 W

*: The low beam headlights are high voltage discharged type. Replacement of a low beam headlight bulb should be performed by your dealer.

Air Conditioning

Refrigerant type	HFC-134a (R-134a)
Charge quantity	15.8—17.6 oz (450—500 g)
Lubricant type	SP-10

Battery

Capacity	12 V — 52 AH/5 HR 12 V — 65 AH/20 HR

Fuses

Interior	See page 473 or the fuse label attached to the dashboard.
Under-hood	See page 474 or the fuse box covers.

Alignment

Toe-in	Front	0.0 in (0 mm)
	Rear	0.10 in (2.5 mm)
Camber	Front	0 ° 10 ′
	Rear	—1 °
Caster	Front	2 ° 57 ′

Tires

Size	Front/Rear	P235/55R18 99V
	Spare	T165/80D17 104M
Pressure	Front/Rear	32 psi (220 kPa , 2.2 kgf/cm²)
	Spare	60 psi (420 kPa , 4.2 kgf/cm²)

DOT Tire Quality Grading (U.S. Vehicles)

The tires on your vehicle meet all U.S. Federal Safety Requirements. All tires are also graded for treadwear, traction, and temperature performance according to Department of Transportation (DOT) standards. The following explains these gradings.

Uniform Tire Quality Grading
Quality grades can be found where applicable on the tire sidewall between tread shoulder and maximum section width. For example:

Treadwear 200
Traction AA
Temperature A

All passenger car tires must conform to Federal Safety Requirements in addition to these grades.

Treadwear
The treadwear grade is a comparative rating based on the wear rate of the tire when tested under controlled conditions on a specified government test course. For example, a tire graded 150 would wear one and one-half (1 1/2) times as well on the government course as a tire graded 100. The relative performance of tires depends upon the actual conditions of their use, however, and may depart significantly from the norm due to variations in driving habits, service practices and differences in road characteristics and climate.

Traction
The traction grades, from highest to lowest, are AA, A, B, and C. Those grades represent the tire's ability to stop on wet pavement as measured under controlled conditions on specified government test surfaces of asphalt and concrete. A tire marked C may have poor traction performance.

Warning: The traction grade assigned to this tire is based on straight-ahead braking traction tests, and does not include acceleration, cornering, hydroplaning, or peak traction characteristics.

Temperature
The temperature grades are A (the highest), B, and C, representing the tire's resistance to the generation of heat and its ability to dissipate heat when tested under controlled conditions on a specified indoor laboratory test wheel. Sustained high temperature can cause the material of the tire to degenerate and reduce tire life, and excessive temperature can lead to sudden tire failure. The grade C corresponds to a level of performance which all passenger car tires must meet under the Federal Motor Vehicle Safety Standard No. 109. Grades B and A represent higher levels of performance on the laboratory test wheel than the minimum required by law.

Warning: The temperature grade for this tire is established for a tire that is properly inflated and not overloaded. Excessive speed, underinflation, or excessive loading, either separately or in combination, can cause heat buildup and possible tire failure.

Tire Labeling

The tires that came on your vehicle have a number of markings. Those you should be aware of are described below.

TIRE LABELING EXAMPLE

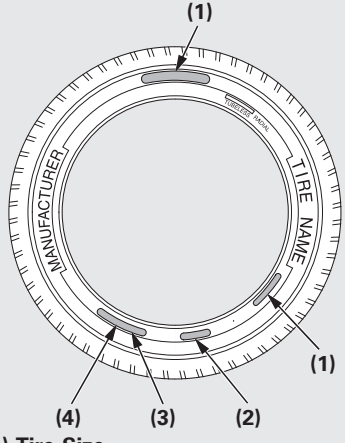

(1) Tire Size
(2) Tire Identification Number (TIN)
(3) Maximum Tire Pressure
(4) Maximum Tire Load

Tire Size

Whenever tires are replaced, they should be replaced with tires of the same size. Below is an example of tire size with an explanation of what each component means.

P235/55R18 99V

P – Vehicle type (P indicates passenger vehicle).
235 – Tire width in millimeters.
55 – Aspect ratio (the tire's section height as a percentage of its width).
R – Tire construction code (R indicates radial).
18 – Rim diameter in inches.
99 – Load index (a numerical code associated with the maximum load the tire can carry).
V – Speed symbol (an alphabetical code indicating the maximum speed rating).

Tire Identification Number (TIN)

The tire identification number (TIN) is a group of numbers and letters that look like the following example. TIN is located on the sidewall of the tire.

DOT B97R FW6X 2202

DOT – This indicates that the tire meets all requirements of the U.S. Department of Transportation.
B97R – Manufacturer's identification mark.
FW6X – Tire type code.
2202 – Date of manufacture.
year
week

Glossary of Tire Terminology
Cold Tire Pressure – The tire air pressure when the vehicle has been parked for at least three hours or driven less than 1 mile (1.6 km).

Load Rating – Means the maximum load that a tire is rated to carry for a given inflation pressure.

Maximum Inflation Pressure – The maximum tire air pressure that the tire can hold.

Maximum Load Rating – Means the load rating for a tire at the maximum permissible inflation pressure for that tire.

Recommended Inflation Pressure – The cold tire inflation pressure recommended by the manufacturer.

Treadwear Indicators (TWI) – Means the projections within the principal grooves designed to give a visual indication of the degrees of wear of the tread.

Tire Pressure Monitoring System (TPMS) – Required Federal Explanation
Each tire, including the spare (if provided), should be checked monthly when cold and inflated to the inflation pressure recommended by the vehicle manufacturer on the vehicle placard or tire inflation pressure label.

(If your vehicle has tires of a different size than the size indicated on the vehicle placard or tire inflation pressure label, you should determine the proper tire inflation pressure for those tires.)

As an added safety feature, your vehicle has been equipped with a tire pressure monitoring system (TPMS) that illuminates a low tire pressure telltale



when one or more of your tires is significantly under-inflated

Accordingly, when the low tire pressure telltale illuminates, you should stop and check your tires as soon as possible, and inflate them to the proper pressure.

CONTINUED

Driving on a significantly under-inflated tire causes the tire to overheat and can lead to tire failure. Underinflation also reduces fuel efficiency and tire tread life, and may affect the vehicle's handling and stopping ability.

Please note that the TPMS is not a substitute for proper tire maintenance, and it is the driver's responsibility to maintain correct tire pressure, even if under-inflation has not reached the level to trigger illumination of the TPMS low tire pressure telltale.

Your vehicle has also been equipped with a TPMS malfunction indicator to indicate when the system is not operating properly. The TPMS malfunction indicator is combined with the low tire pressure telltale. When the system detects a malfunction, the telltale will flash for approximately one minute and then remain continuously illuminated. This sequence will continue upon subsequent vehicle start-ups as long as the malfunction exists.

When the malfunction indicator is illuminated, the system may not be able to detect or signal low tire pressure as intended.

TPMS malfunctions may occur for a variety of reasons, including the installation of replacement or alternate tires or wheels on the vehicle that prevent the TPMS from functioning properly.

Always check the TPMS malfunction telltale after replacing one or more tires or wheels on your vehicle to ensure that the replacement or alternate tires and wheels allow the TPMS to continue to function properly.

The burning of gasoline in your vehicle's engine produces several by-products. Some of these are carbon monoxide (CO), oxides of nitrogen (NOx), and hydrocarbons (HC). Gasoline evaporating from the tank also produces hydrocarbons. Controlling the production of NOx, CO, and HC is important to the environment. Under certain conditions of sunlight and climate, NOx and HC react to form photochemical “smog.” Carbon monoxide does not contribute to smog creation, but it is a poisonous gas.

The Clean Air Act

The United States Clean Air Act* sets standards for automobile emissions. It also requires that automobile manufacturers explain to owners how their emissions controls work and what to do to maintain them. This section summarizes how the emissions controls work. Scheduled maintenance is on page 418.

* In Canada, Acura vehicles comply with the Canadian emission requirements, as specified in an agreement with Environment Canada, at the time they are manufactured.

Crankcase Emissions Control System

Your vehicle has a positive crankcase ventilation system. This keeps gasses that build up in the engine's crankcase from going into the atmosphere. The positive crankcase ventilation valve routes them from the crankcase back to the intake manifold. They are then drawn into the engine and burned.

Evaporative Emissions Control System

As gasoline evaporates in the fuel tank, an evaporative emissions control canister filled with charcoal adsorbs the vapor. It is stored in this canister while the engine is off. After the engine is started and warmed up, the vapor is drawn into the engine and burned during driving.

Onboard Refueling Vapor Recovery
The onboard refueling vapor recovery (ORVR) system captures the fuel vapors during refueling. The vapors are adsorbed in a canister filled with activated carbon. While driving, the fuel vapors are drawn into the engine and burned off.

Exhaust Emissions Controls
The exhaust emissions controls include three systems: PGM-FI, ignition timing control, and three way catalytic converter. These three systems work together to control the engine's combustion and minimize the amount of HC, CO, and NOx that come out the tailpipe. The exhaust emissions control systems are separate from the crankcase and evaporative emissions control systems.

PGM-FI System
The PGM-FI system uses sequential multiport fuel injection.
It has three subsystems: air intake, engine control, and fuel control. The powertrain control module (PCM) uses various sensors to determine how much air is going into the engine. It then controls how much fuel to inject under all operating conditions.

Ignition Timing Control System
This system constantly adjusts the ignition timing, reducing the amount of HC, CO, and NOx produced.

Three Way Catalytic Converter
The three way catalytic converter is in the exhaust system. Through chemical reactions, it converts HC, CO, and NOx in the engine's exhaust to carbon dioxide (CO_2), nitrogen (N_2), and water vapor.

Replacement Parts
The emissions control systems are designed and certified to work together in reducing emissions to levels that comply with the Clean Air Act. To make sure the emissions remain low, you should use only new Acura replacement parts or their equivalent for repairs. Using lower quality parts may increase the emissions from your vehicle.

The emissions control systems are covered by warranties separate from the rest of your vehicle. Read your warranty manual for more information.

The three way catalytic converters contain precious metals that serve as catalysts, promoting chemical reactions to convert the exhaust gasses without affecting the metals. The catalytic converters are referred to as three-way catalysts, since they act on HC, CO, and NOx. Replacement units must be original Acura parts or their equivalent.

The three way catalytic converter must operate at a high temperature for the chemical reactions to take place. It can set on fire any combustible materials that come near it. Park your vehicle away from high grass, dry leaves, or other flammables.

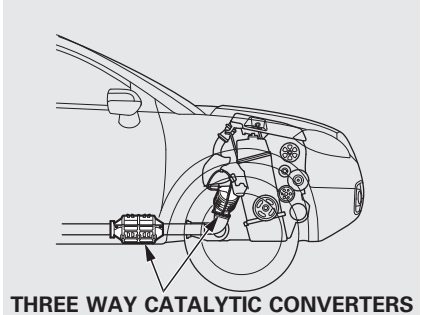

THREE WAY CATALYTIC CONVERTERS

A defective three way catalytic converter contributes to air pollution, and can impair your engine's performance. Follow these guidelines to protect your vehicle's three way catalytic converter.

- Always use unleaded gasoline. Even a small amount of leaded gasoline can contaminate the catalyst metals, making the three way catalytic converter ineffective.
- Keep the engine well maintained.
- Have your vehicle diagnosed and repaired if it is misfiring, backfiring, stalling, or otherwise not running properly.

Testing of Readiness Codes
If you take your vehicle for an emissions test shortly after the battery has been disconnected or gone dead, it may not pass the test. This is because of certain "readiness codes" that must be set in the on-board diagnostics for the emissions systems. These codes are erased when the battery is disconnected, and set again only after several days of driving under a variety of conditions.

If the testing facility determines that the readiness codes are not set, you will be requested to return at a later date to complete the test. If you must get the vehicle retested within the next two or three days, you can condition the vehicle for retesting by doing the following.

1. Make sure the gas tank is nearly, but not completely, full (around 3/4).
2. Make sure the vehicle has been parked with the engine off for 6 hours or more.
3. Make sure the ambient temperature is between 40° and 95°F (4° and 35°C).
4. Without touching the accelerator pedal, start the engine, and let it idle for 20 seconds.
5. Keep the vehicle in Park. Increase the engine speed to 2,000 rpm, and hold it there until the temperature gauge rises to at least 1/4 of the scale (about 3 minutes).
6. Without touching the accelerator pedal, let the engine idle for 20 seconds.
7. Drive your vehicle for 30 seconds while accelerating.

8. Select a nearby lightly traveled major highway where you can maintain a speed of 50 to 60 mph (80 to 100 km/h) for at least 20 minutes. Drive on the highway in D. Do not use the cruise control. When traffic allows, drive for 90 seconds without moving the accelerator pedal. (Vehicle speed may vary slightly; this is okay.) If you cannot do this for a continuous 90 seconds because of traffic conditions, drive for at least 30 seconds, then repeat it two more times (for a total of 90 seconds).
9. Then drive in city/suburban traffic for at least 10 minutes. When traffic conditions allow, let the vehicle coast for several seconds without using the accelerator pedal or the brake pedal.
10. Make sure the vehicle has been parked with the engine off for 30 minutes.

If the testing facility determines the readiness codes are still not set, see your dealer.

Client Service Information..... 494
Warranty Coverages 495
Reporting Safety Defects..... 496
Authorized Manuals..... 497

Client Service Information

Acura dealership personnel are trained professionals. They should be able to answer all your questions. If you encounter a problem that your dealership does not solve to your satisfaction, please discuss it with the dealership's management. The service manager or general manager can help. Almost all problems are solved in this way.

If you are dissatisfied with the decision made by the dealership's management, contact Acura Client Relations.

U.S. Owners:
American Honda Motor Co., Inc.
Acura Client Relations
Mail Stop 500-2N-7E
1919 Torrance Blvd.
Torrance, CA 90501-2746

Tel: (800) 382-2238

Canadian Owners:
Acura Client Services
Honda Canada Inc.

Visit *www.acura.ca* for contact information

Tel: 1-888-9-ACURA-9

Fax: 1-877-939-0909

In Puerto Rico and the U.S. Virgin Islands:
Vortex Motor Corp.
Bella International
P.O. Box 190816
San Juan, PR 00919-0816

Tel: (787) 620-7546

When you call or write, please give us this information:

- Vehicle Identification Number (see page 478)
- Name and address of the dealer who services your vehicle
- Date of purchase
- Odometer reading of your vehicle
- Your name, address, and telephone number
- A detailed description of the problem
- Name of the dealer who sold the vehicle to you

U.S. Owners
Your new vehicle is covered by these warranties:

New Vehicle Limited Warranty – covers your new vehicle, except for emissions control systems and accessories against defects in materials and workmanship.

Emissions Control Systems Defects Warranty and Emissions Performance Warranty – these two warranties cover your vehicle's emissions control systems. Time, mileage, and coverage are conditional. Please read your warranty booklet for exact information.

Seat Belt Limited Warranty – a seat belt that fails to function properly is covered by a limited warranty. Please read your warranty booklet for details.

Rust Perforation Limited Warranty – all exterior body panels are covered for rust-through from the inside for the specified time period with no mileage limit.

Accessory Limited Warranty – Acura accessories are covered under this warranty. Time and mileage limits depend on the type of accessory and other factors. Please read your warranty manual for details.

Replacement Parts Limited Warranty – covers all Acura replacement parts against defects in materials and workmanship.

Replacement Battery Limited Warranty – provides prorated coverage for a replacement battery purchased from your dealer.

Replacement Muffler Lifetime Limited Warranty – provides coverage for as long as the purchaser of the muffler owns the vehicle.

Restrictions and exclusions apply to all these warranties. Please read the 2012 Acura warranty information booklet that came with your vehicle for precise information on warranty coverages. Your vehicle's original tires are covered by their manufacturer. Tire warranty information is in a separate booklet.

Canadian Owners
Please refer to the 2012 warranty manual that came with your vehicle.

In the US
If you believe that your vehicle has a defect which could cause a crash or could cause injury or death, you should immediately inform the National Highway Traffic Safety Administration (NHTSA) in addition to notifying American Honda Motor Co., Inc.

If NHTSA receives similar complaints, it may open an investigation, and if it finds that a safety defect exists in a group of vehicles, it may order a recall and remedy campaign. However, NHTSA cannot become involved in individual problems between you, your dealer, or American Honda Motor Co., Inc.

To contact NHTSA, you may call the Vehicle Safety Hotline toll-free at 1-888-327-4236 (TTY: 1-800-424-9153); go to *http://www.safercar.gov*; or write to: Administrator, NHTSA, 1200 New Jersey Avenue, SE., Washington, DC 20590.
You can also obtain other information about motor vehicle safety from *http://www.safercar.gov*.

In Canada
If you believe that your vehicle has a defect which could cause a crash or could cause injury or death, you should immediately inform Honda Canada Inc. and you may also inform Transport Canada.

If Transport Canada receives similar complaints, it may open an investigation, and if it finds that a safety defect exists in a group of vehicles, it may lead to a recall and remedy campaign. However, Transport Canada cannot become involved in individual problems between you, your dealer, or Honda Canada Inc.

To contact Transport Canada's Defect Investigations and Recalls Division, you may call 1-800-333-0510. For more information on reporting safety defects or about motor vehicle safety, go to *http://www.tc.gc.ca/roadsafety*.

Purchasing Factory Authorized Manuals (U.S. only)

The publications shown below can be purchased from Helm Incorporated. You can order by phone or online:

- Call Helm Inc. at 1-800-782-4356 (credit card orders only)
- Go online at *www.helminc.com*

If you are interested in other years or models, contact Helm Inc. at 1-800-782-4356.

Publication Form Number	Form Description
61STK05	2010-2012 Acura RDX Service Manual
61STK05EL	2012 Acura RDX Electrical Troubleshooting Manual
61STK30	2007 Model series Acura RDX Body Repair Manual
31STK650	2012 Acura RDX Owner's Manual
31STK850	2012 Acura RDX Navigation System Manual
31STKM50	2012 Acura RDX Maintenance Journal
31STKQ50	2012 Acura RDX Advanced Technology Guide
ACU-R	Order Form for Previous Years- Indicate Year and Model Desired

Service Manual:
Covers maintenance and recommended procedures for repair to engine and chassis components. It is written for the journeyman mechanic, but it is simple enough for most mechanically inclined owners to understand.

Electrical Troubleshooting Manual:
Complements the Service Manual by providing in-depth troubleshooting information for each electrical circuit in your vehicle.

Body Repair Manual:
Describes the procedures involved in the replacement of damaged body parts.

A

Accessories and Modifications 362
ACCESSORY (Ignition Key Position) 125
Accessory Power Sockets 157
AcuraLink® (U.S. models only) 332
Additives, Engine Oil 421
Adjusting the Sound 177, 224
Adjusting the Steering Wheel 122
Advanced Airbags 28
Airbag (SRS) 10, 24
Air Conditioning System 164
  Usage 165
Air Pressure, Tires 444, 445
Alcohol in Gasoline 352
Antifreeze 424
Anti-lock Brakes (ABS)
  Indicator 66, 388
  Operation 388
Anti-theft, Audio System 291
Anti-theft Steering Column Lock 125
Armrests 138
Audio Antenna 439
Audio System 172, 216
Automatic Lighting Off Feature 118
Automatic Seat Belt Tensioners ... 22
Automatic Speed Control 300
Automatic Transmission 376
  Capacity, Fluid 480
  Checking Fluid Level 427
  Driving with the Paddle Shifters 380
  Shifting 376
  Shift Lever Position Indicators 376
  Shift Lever Positions 377
  Shift Lock Release 379
Auxiliary Input Jack 291

B

Battery
  Charging System Indicator 65, 465
  Jump Starting 461
  Maintenance 450
  Specifications 481
Before Driving 351
Belts, Seat 9, 20
Beverage Holders 156
Bluetooth® Audio 212, 280
Bluetooth® HandsFreeLink® 306
Booster Seats 54
Brakes
  Anti-lock Brakes (ABS) 388
  Break-in, New Linings 352
  Bulb Replacement 434
  Fluid 429
  Parking 150
  System Design 387
  System Indicator (Amber) 468
  System Indicator (Red) 467
  Wear Indicators 387
Braking System 387
Break-in, New Vehicle 352
Brightness Control, Instruments 120

CONTINUED

Bulb Replacement
Back-up Lights 433
Brake Lights 434
Fog Lights 435
Front Parking Lights 432
Front Side Marker Lights 432
Headlights 431
High-mount Brake Light 436
Rear Bulbs 433, 434
Rear License Plate Lights 437
Specifications 481
Taillights 433, 434
Turn Signal Lights 432, 434
Bulbs, Halogen 431

C

Capacities Chart 480
Carbon Monoxide Hazard 57
Cargo 365
Cargo Area Cover 160
Cargo Area Light 153
Cargo, How to Carry 365
Carrying Cargo 365
CAUTION, Explanation of iii
CD Care 257
Ceiling Lights 151
Certification Label 478
Chains, Tires 449
Changing a Flat Tire 455
Changing Oil
How to 422
When to 411
Charging System
Indicator 65, 465
Checklist, Before Driving 373
Childproof Door Locks 127
Child Safety 36
Booster Seats 54
Child Seats 41, 42, 44
Important Safety Reminders 40
Infants 41
Larger Children 53
LATCH 46
Risks with Airbags 37
Small Children 42
Tethers 51
Warning Labels 38
Where Should a Child Sit? 37
Child Seats 44
LATCH Anchorage Points 46
Tether Anchorage Points 51
Cleaning the Seat Belts 438
Client Service Information 494
Climate Control Sensors 171
Climate Control System 164
Clock 293
Coat Hook 161
Code, Audio System 291
CO in the Exhaust 57, 487
Cold Weather, Starting in 374
Compact Spare Tire 454
Compass Operation 295
Console Compartment 158
Consumer Information 494
Controls, Instruments and 61
Coolant
Adding 424
Checking 358
Proper Solution 424
Courtesy Lights 153
Crankcase Emissions Control
System 487
Cruise Control Indicator 69
Cruise Control Operation 300
Cruise Main Indicator 69
Cup Holders 156

Customized Settings 82

D

DANGER, Explanation of iii
Dashboard 3, 62
Daytime Running Lights 119
Dead Battery 461
Defogger, Rear Window 121
Defrosting the Windows 167
Dimensions 480
Dimming the Headlights 116
Dipstick
  Automatic Transmission 427
  Engine Oil 357
Directional Signals 69, 116
Disc Brake Wear Indicators 387
Disc Care 257
Disc Changer 185, 239
Disc Changer Error Messages 195, 255
Disc Player 185, 239
Disposal of Used Oil 423
Doors
  Childproof Door Locks 127
  Locking and Unlocking 126
  Power Door Locks 126
DOT Tire Quality Grading (U.S. Vehicles) 482
Driver and Passenger Safety 5
Driving 371
  Economy 358
Driving Guidelines 372
Driving Position Memory System 148
Driving with the Paddle Shifters 380
Dust and Pollen Filter 439

E

Economy, Fuel 358
Emergencies on the Road 453
  Battery, Jump Starting 461
  Brake System Indicator ... 467, 468
  Changing a Flat Tire 455
  Charging System Indicator 65, 465
  Checking the Fuses 470
  Driving with a Flat Tire 455
  Hazard Warning Flashers 121
  Jump Starting 461
  Low Oil Pressure Indicator 65, 465
  Malfunction Indicator Lamp 65, 466
  Overheated Engine 463
  Towing 475
Emergency Brake 150
Emergency Flashers 121
Emergency Towing 475
Emissions Controls 487
Emissions Testing 490
Engine
  Adding Engine Coolant 424
  If it Won't Start 459
  Malfunction Indicator Lamp 65, 466
  Oil Life Indicator 411
  Oil Pressure Indicator 65, 465
  Overheating 463
  Specifications 480
  Speed Limiter 378
  Starting 374
Engine Coolant 424

CONTINUED

Engine Number 479
Ethanol in Gasoline 352
Evaporative Emissions
Controls 487
Exhaust Emissions Controls 488
Exhaust Fumes 57
Expectant Mothers, Use of Seat
Belts by 18

F

Fan, Interior 166
Features 163
Filters
Dust and Pollen 439
Oil 422
Flashers, Hazard Warning 121
Flat Tire, Changing a 455
Floor Mats 438
Fluids
Automatic Transmission 427
Brake 429
Location 419
Power Steering 430
Windshield Washer 426
FM/AM Radio Reception 287
Fog Lights 119
Folding the Rear Seats Down 138
Four-way Flashers 121
Front Airbags 10, 26
Front Door Pockets 155
Front Seat
Heaters 141
Front Seat Power
Adjustments 134
Fuel 352
Economy 358
Fill Door and Cap 354
Gauge 73
Low Fuel Indicator 68
Octane Requirement 352
Reserve Indicator 68
Tank, Filling the 354
Tighten Fuel Cap 355
Fuel Economy 358
Fuses, Checking the 470

G

Gas Mileage, Improving 360
Gasoline 352
Low Fuel Indicator 68
Octane Requirement 352
Tank, Refueling 354
Gas Station Procedures 354
Gauges
Fuel 73
Speedometer 73
Tachometer 73
Turbo Boost Meter 73
Gearshift Lever Positions
Automatic
Transmission 376, 377
Glove Box 155
Gross Axle Weight Rating
(GAWR) 398
Gross Vehicle Weight Rating
(GVWR) 398

H

HandsFreeLink® 306
Hazard Warning Flashers 121
Headlights
Aiming 431

Automatic Lighting Off 118
Automatic Lighting On 117
Daytime Running Lights 119
High Beam Indicator 69
High Beams, Turning on 116
Lights On Indicator 70
Low Beams, Turning on 116
Reminder Chime 116
Turning on 116
Head Restraints 135
Heated Mirrors 147
Heaters, Seats 141
Heating and Cooling 164
High Altitude, Starting at 374
High-Low Beam Switch 117
HomeLink® Universal Transceiver 303
Hood, Opening and Closing the 356
Horn 4, 113

I

Identification Number, Vehicle 478
Ignition
Keys 122
Switch 125
Timing Control System 488
Immobilizer System 124
Important considerations when selecting a child seat 44
Important Safety Precautions 6
Indicators, Instrument Panel 63
ABS (Anti-lock Brake) 66, 388
A/T Temp 65
Brake (Amber) 67, 468
Brake (Red) 67, 467
Charging System 65, 465
Cruise Control 69
Cruise Main 69
Fog Lights 70
High Beam 69
Key (Immobilizer System) 66
Lights On 70
Low Fuel 68
Low Oil Pressure 65, 465
Low Tire Pressure/ TPMS 71, 390
Maintenance Minder™ 411
Malfunction Indicator Lamp 65, 466
Passenger Airbag Off 33
Seat Belt Reminder 20, 64
Security System 70
SH-AWD® 70
Side Airbag Off 32, 66
SRS 32, 65
System Message 72
TPMS/Tire Pressure Monitor 71, 390
Turn Signal and Hazard Warning 69
VSA OFF 69
VSA System 68
Individual Map Lights 152
Infant Restraint 41
Infant Seats 41
Tether Anchorage Points 51
Inflation, Proper Tire 444
Recommended Pressures 445
Inside Mirror 146
Inspection, Tire 445
Installing a Child Seat 45
Instrument Panel 63

CONTINUED

Instrument Panel Brightness 120
Instruments and Controls 61
Intercooler 439
Interface Dial 216
Interior Care 452
Interior Lights 151
Introduction i
iPod® 197, 260
iPod® Error Messages 203, 269

J

Jacking up the Vehicle 455
Jack, Tire 455
Jump Starting 461

K

Keys 122

L

Label, Certification 478
Lane Change, Signaling 116
Lap/Shoulder Belt 15, 21
LATCH Anchorage System 46
Lights
  Indicator 63
  Interior 151
  Parking 116
  Turn Signal 116
Load Limit 366, 397
LOCK (Ignition Key Position) 125
Locks
  Anti-theft Steering Column 125
  Childproof Door 127
  Fuel Fill Door 354
  Glove Box 155
  Lockout Prevention 127
  Power Door 126
  Tailgate 128
Low Coolant Level 358
Lower Anchors 46
Low Fuel Indicator 68
Low Oil Pressure
  Indicator 65, 465
Low Tire Pressure/TPMS
  Indicator 71, 390
Lubricant Specifications Chart ... 480
Luggage, Storing (cargo) 365

M

Maintenance 409
  Main Items and Sub Items 415
  Minder 411
  Owner's Maintenance
    Checks 417
  Safety 410
  Schedule 418
Malfunction Indicator
  Lamp 65, 466
Memory, Driving Position 148
Meters, Gauges 73
Methanol in Gasoline 352
Mirrors, Adjusting 146
Modifications 363
Modifying Your Vehicle 363
Moonroof 144
Multi-Information Display 74

N

Neutral Gear Position 377
New Vehicle Break-in 352
NOTICE, Explanation of i

Numbers, Identification 478

O

Octane Requirement, Gasoline 352
Odometer 76
Odometer, Trip 76
Off-Highway Driving Guidelines 405
Off-Road Precautions 405
Oil
Change, How to 422
Change, When to 411
Checking Engine 357
Life, Engine 411
Pressure Indicator 65, 465
Selecting Proper Viscosity Chart 420
Onboard Refueling Vapor Recovery 488
ON (Ignition Key Position) 125
Outside Mirrors 146
Outside Temperature 76
Overheating, Engine 463
Owner's Maintenance Checks 417
Oxygenated Fuels 352

P

Panel Brightness Control 120
Park Gear Position 377
Parking 386
Parking Brake 150
Parking Brake and Brake System Indicator 467
Parking Lights 116
Parking Over Things that Burn 386, 489
Passenger Airbag Off Indicator 33
PGM-FI System 488
Playing an iPod® 197, 260
Playing a USB Flash Memory Device 204, 270
Playing Disc 185
Playing the FM/AM Radio 174, 217
Playing the XM® Radio 179, 228
Pollen Filter 439
Power Door Locks 126
Power Seat Adjustments 134
Power Socket Locations 157
Power Steering Fluid 430
Power Windows 142
Pregnancy, Using Seat Belts 18
Preparing to Drive 373
Proper Seat Belt Usage 15
Protecting Adults and Teens 12
Additional Safety Precautions ... 19
Advice for Pregnant Women 18
Protecting Children 36
General Guidelines 36
Protecting Infants 41
Protecting Larger Children 53
Protecting Small Children 42
Using Child Seats with Tethers 51
Using LATCH 46

R

Radiator Overheating 463
Radio/CD Sound System 172
Radio/Disc Sound System 174
Radio Theft Protection 291

CONTINUED

Readiness Codes 490
Rear Lights, Bulb
Replacement 433
Rear Seat Folding Down 138
Rearview Mirror 146
Rearview Mirror with Rearview
Camera Display 348
Rear Window Defogger 121
Rear Window Wiper and
Washer 115
Recalling a Memorized Driving
Position 133
Reclining the Seat Backs 134
Refueling 354
Reminder Indicators 64
Remote Audio Controls 289
Remote Transmitter 130
Replacement Information
Dust and Pollen Filter 439
Engine Oil and Filter 422
Fuses 469
Light Bulbs 431
Schedule 418
Spark Plugs 480
Tires 447
Wiper Blades 440
Replacing Seat Belts After a
Crash 23
Reporting Safety Defects 496
Required Engine Oil 420
Reserve Tank, Engine
Coolant 358, 424
Restraint, Child 36
Reverse Gear Position 377
Reverse Tilt Door Mirror 147
Rotation, Tire 447

S

Safety Belts 9, 20
Safety Defects, Reporting 496
Safety Features 8
Airbags 10, 24
Door Locks 12
Head Restraints 15
Seat Belts 9, 15, 20
Seats & Seat-Backs 13, 14
Safety Labels, Location of 58
Safety Messages iii
Seat Belts 9, 20
Additional Information 20
Advice for Pregnant Women 18
Automatic Seat Belt
Tensioners 22
Cleaning 438
Lap/Shoulder Belt 15, 21
Maintenance 23
Reminder Indicator and
Beeper 20, 64
System Components 20
Use During Pregnancy 18
Wearing a Lap/Shoulder
Belt 15, 21
Seats 134
Armrest 138
Head Restraints 135
Heaters 141
Position Memory 148
Seats, Adjusting the 134
Security System 294
Security System Indicator 70
Sensors
Driver's Seat Position Sensor ... 28
Front Passenger's Weight
Sensors 28
Impact Sensors 24
Serial Number 478

Service Intervals 411
Service Manual (U.S. only) 497
Service Station Procedures 354
Setting the Clock 293
SH-AWD® 384
  Indicator 70
  Torque Distribution Monitor ... 384
Shifting the Automatic Transmission 376
Shift Lever Position Indicators ... 376
Shift Lock Release 379
Side Airbags 30
  How the Side Airbag Off Indicator Works 32
  How Your Side Airbags Work .. 30
Side Curtain Airbags 31
  How Your Side Curtain Airbags Work 31
Side Marker Lights, Bulb Replacement in 432
Signaling Turns 69
Snow Tires 448
Sound System 172, 216
Spare Tire 454
  Inflating 444, 454
  Specifications 481
Spark Plugs 480
Specifications 480
Speed Control 300
Speed Limiter 378
Speedometer 73
SRS, Additional Information 24
  Additional Safety Precautions ... 35
  Airbag Service 34
  Airbag System Components 24
  How the Side Airbag Off Indicator Works 32
  How the SRS Indicator Works .. 32
  How Your Front Airbags Work 26
  How Your Side Airbags Work .. 30
  How Your Side Curtain Airbags Work 31
SRS Indicator 32, 65
START (Ignition Key Position) 125
Starting the Engine 374
  Auto Control Mode 375
  In Cold Weather at High Altitude 374
  With a Dead Battery 461
State Emissions Testing 490
Steam Coming from Engine 463
Steering Wheel
  Adjustments 122
  Anti-theft Column Lock 125
  Buttons 289, 300
Stereo Sound System 172, 216
Storing Your Vehicle 451
Sun Visor 157
Super Handling-All Wheel Drive™ (SH-AWD®) System 384
Supplemental Restraint System 10, 24
  Servicing 34
  SRS Indicator 32, 65
  System Components 24
System Messages 79

T

Tachometer 73
Tailgate 128
  Opening the 128
  Open Monitor 12
Taillights, Changing Bulbs in 433

CONTINUED

Taking Care of the Unexpected 453
Technical Descriptions
DOT Tire Quality Grading (U.S. Vehicles) 482
Emissions Control Systems 487
Three Way Catalytic Converter 489
Tire Labeling 484
Tire Pressure Monitoring System (TPMS) − Required Federal Explanation 485
Temperature, Outside 76
Tensioners, Seat Belts 22
Tether Anchorage Points 51
Theft Protection, Radio 291
Three Way Catalytic Converter 489
Tilt/Telescopic Steering Wheel 122
Time, Setting the 293
Tire Chains 449
Tire, How to Change a Flat 455
Tire Information 484
Tire Labeling 484
Tire Pressure Monitoring System (TPMS) 390, 485
Low Tire Pressure Indicator 71
Tire Pressure Monitor 78, 391
Tires 444
Air Pressure 445
Chains 449
Checking Wear 445
Compact Spare 454
DOT Tire Quality Grading (U.S. Vehicles) 482
Inflation 444
Inspection 445
Labeling 484
Maintenance 446
Pressure Monitoring System ... 390
Replacing 447
Rotating 447
Snow 448
Specifications 481
Tools, Tire Changing 455
To Play the Radio 174
Towing
A Trailer 397
Emergency Wrecker 475
Equipment and Accessories 399
Trailer Towing Tips 401
Weight Limit 397
TPMS (Tire Pressure Monitoring System) 390
Required Federal Explanation 485
Transmission
Checking Fluid Level 427
Fluid Selection 428
Identification Number 478
Shifting the Automatic 376
Treadwear 482
Trip Meter 76
Turbo Boost Meter 73
Turn Signals 69
Turn Signals and Headlights 116

U

Unexpected, Taking Care of the 453
Uniform Tire Quality Grading (U.S. only) 482
Unleaded Gasoline 352

USB Flash Memory Device Error Messages 211, 279
Used Oil, How to Dispose of 423

V

Vanity Mirror 158
Vehicle Capacity Load 366
Vehicle Dimensions 480
Vehicle Identification Number ... 478
Vehicle Stability Assist (VSA) System 395
VSA OFF Indicator 69
VSA System Indicator 68
Vehicle Storage 451
VIN 478
Viscosity, Oil 420

W

WARNING, Explanation of iii
Warning Labels, Location of 58
Warranty Coverages (U.S. only) 495
Washer, Windshield
Checking the Fluid Level 426
Operation 114
Wheels 443
Adjusting the Steering 122
Alignment and Balance 446
Compact Spare 454
Wrench, Nut 455
Windows
Auto Reverse 143
Operating the Power 142
Rear, Defogger 121
Windshield
Cleaning 114
Defroster 167
Washers 114, 426
Wipers, Windshield
Changing Blades 440
Operation 114
Rear Windshield Wiper and Washer 115
Worn Tires 445
Wrecker, Emergency Towing 475

X

XM® Radio 179, 228

Service Information Summary

Gasoline:
Premium unleaded gasoline, pump octane number of 91 or higher.

NOTICE

Avoid driving with an extremely low fuel level. Running out of fuel could cause the engine to misfire, damaging the catalytic converter.

Fuel Tank Capacity:
18.0 US gal (68 L)

Required Engine Oil;
Always use Mobil 1® 5W-30 or an equivalent oil that meets the Acura HTO-06 standard.

Oil change capacity (including filter):
5.0 US qt (4.7 L)

Automatic Transmission Fluid:
Acura ATF DW-1
(automatic transmission fluid)
(see page 427).

On models with SH-AWD
Rear Differential Fluid:
Use Acura All-Wheel Drive Fluid (DPSF) only.

Capacity:
SH-AWD differential case
2.67 US qt (2.53 L)

On models with SH-AWD
Transfer Assembly Fluid:
SAE 90 or SAE 80W-90 viscosity hypoid gear oil, API service classified GL4 or GL5 only.

Power Steering Fluid:
Acura Power Steering Fluid preferred, or another brand of power steering fluid as a temporary replacement. Do not use ATF (see page 430).

Brake Fluid:
Honda Heavy Duty Brake Fluid DOT 3 preferred, or a DOT 3 or DOT 4 brake fluid as a temporary replacement (see page 429).

Tire Pressure (measured cold):
Front/Rear:
32 psi (220 kPa , 2.2 kgf/cm^2)

Spare Tire Pressure:
60 psi (420 kPa , 4.2 kgf/cm^2)